Miniature General Purpose Regulators R07, R46

R07 General purpose:
- Snap action knob locks pressure setting when pushed in
- Standard relieving models allow reduction of outlet pressure even when the system is dead-ended

R46 Non-repairable:
- Wrench flats for easy installation
- Relieving piston design allows reduction of downstream pressure when the system is dead-ended
- Choice of left to right or right to left flow

R07

R46

Technical data

R07
Fluid:
Compressed air, neutral gases
NOTE: Contact technical support for use with other media.

Maximum pressure
300 psig (20 bar)

Operating temperature:
-34° to 150°F (-35° to 65°C) *
* Air supply must be dry enough to avoid ice formation at temperatures below 2°C (35°F).

R46
Fluid:
Compressed air

Maximum pressure:
250 psig (17 bar)

Operating temperature*:
-30° to 150°F (-34° to 65°C)
* Air supply must be dry enough to avoid ice formation at temperatures below 35°F (2°C).

Materials
R07
Body: zinc
Bonnet: acetal
Knob: Acetal
Valve seat: acetal
Elastomers: nitrile
Valve: brass, nitrile

R46
Body: zinc
Knob: nylon
Valve: TPV
Valve seat: acetal
Elastomers: nitrile

Ordering information

ISO Symbols	Port Size	Model	Flow† scfm (dm³/s)	Weight lb (kg)
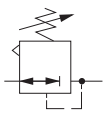 Relieving	1/8"	R07-100-RGKA	14 (6.5)	0.31 (0.19)
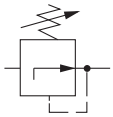 Non relieving	1/4"	R07-200-RGKA	15 (7)	0.31 (0.19)
	1/4"	R46-200-RNLA (left to right flow)	13 (6)	0.2 (0.09)
	1/4"	R46-202-RNLA (right to left flow)	13 (6)	0.2 (0.09)

* Air supply must be dry enough to avoid ice formation at temperatures below 35°F (2°C)
† Typical flow with 150 psig (10 bar) inlet pressure, 90 psig (6.3 bar) set pressure and 15 psig (1 bar) droop from set.

Alternative Models

R07-★00-★★★★

Port Size	Substitute
1/8"	1
1/4"	2

Diaphragm	Substitute
Relieving	R
Non relieving	N

Gauges	Substitute
With	G
Without	N

Threads	Substitute
PTF	A
ISO G parallel	G

Outlet Pressure Adjustment Ranges*	Substitute
1 to 10 psig (0.1 to 0.7 bar)	A
5 to 50 psig (0.3 to 3.5 bar)	E
5 to 100 psig (0.3 to 7 bar)	K
5 to 125 psig (0.3 to 8.6 bar)	L

* Outlet pressure can be adjusted to pressures in excess of, and less than, those specified. Do not use these units to control pressures outside of the specified ranges.

Our policy is one of continued research and development. We therefore reserve the right to amend, without notice, the specifications given in this document. (2017 - 9217c) © 2020 IMI International s.r.o.

Panel mounting hole diameter 1.19" (30 mm)
Maximum panel thickness 0.25" (6 mm)

R07

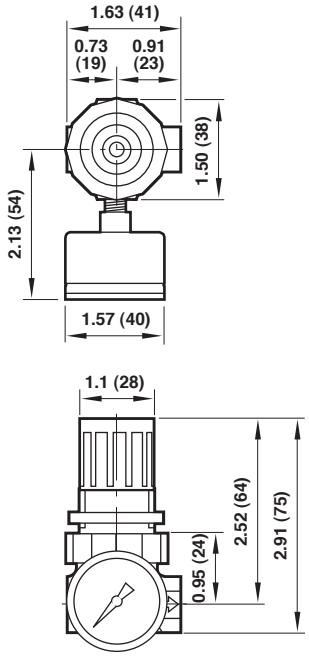

Typical Performance Characteristics

R07

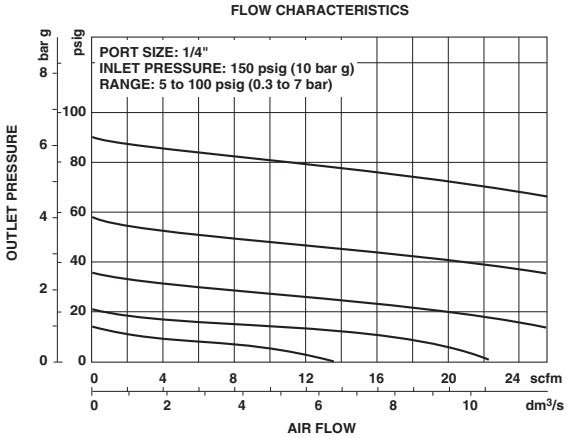

R07 Service Kits

Item	Type	Part number
Service kit	Relieving	3407-02
	Non relieving	3407-01

Service kit includes slip ring, diaphragm, standard valve seat with o-ring, valve, valve spring.

R46

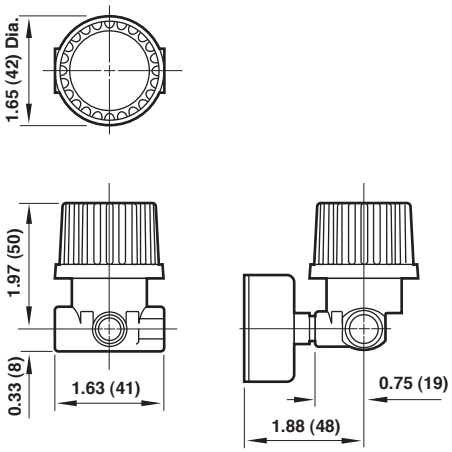

Typical Performance Characteristics

R46

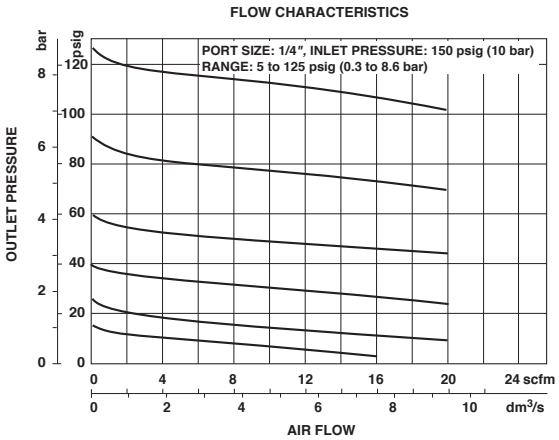

Dimensions in inches (mm)

Our policy is one of continued research and development. We therefore reserve the right to amend, without notice, the specifications given in this document. (2017 - 9217c) © 2020 IMI International s.r.o.