VRW
2/2, 3/2 solenoid poppet valves (directly actuated)

- Port size: G1/8, G1/4, Interface or CNOMO interface version
- Fully encapsulated coil
- Extensive range of power and orifice sizes
- Wide voltage tolerance band
- Wide temperature range
- Shock & vibration to EN 61373, category 2
- Environmental validation to EN 50155
- Fire and smoke compliance to EN 45545-2 and NFF16-101 (see option selector for details)

Technical features

Medium:
Compressed air lubricated or non-lubricated, water
Operation:
Solenoid direct operated poppet valve
Operating pressure:
0 ... 12 bar (0 ... 174 psi)

Orifice:
1,5 ... 2,5 mm
Port size/mounting:
G1/8, G1/4, Interface or CNOMO interface version
Exhaust port (3/2):
G1/8 with ported diffuser

Ambient/Media temperature:
-40 ... +70°C (-40 ... 158°F)
Air supply must be dry enough to avoid ice formation at temperatures below +2°C (+35°F).

Materials:
Valve base: Brass, zinc or plastic
Coil: glass reinforced nylon
Internal parts: stainless steel
Seals: NBR

Technical data – solenoid operators

Nominal voltages	12, 24, 37,5, 52, 72, 96, 110 V d.c.
Power consumption	6 or 8 Watt
Voltage tolerance	±30% of nominal
Duty cycle	100% ED
Electrical connection	DIN EN 175301-803 (DIN 43650) Form A

Protection class	IP65 (with sealed plug fitted)
Fire and smoke	NF F16-101 and EN 45545-2:2013

Test results EN 45545-2:2013

Requirement set	Test results (hazard level classification)
R22	HL2
R23	HL3

Our policy is one of continued research and development. We therefore reserve the right to amend, without notice, the specifications given in this document. (2010 - B5028f) © 2020 Norgren Ltd.

Technical data - standard options

Symbol	Function	Base type	Power (W)	Orifice (mm)	Flow (l/min)	Operating pressure (bar)	Manual override	Dimension No.	Model
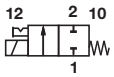	2/2 NC	G 1/8	6	1,5	75	1,5 ... 12	Screw driver turn and lock	1	VRW6101111/**N
		G 1/8	8	2,0	104	1,5 ... 10	Screw driver turn and lock	1	VRW8101121/**N
		G 1/8	8	2,5	152	2,0 ... 10	Screw driver turn and lock	1	VRW8101131/**N
		CNOMO	6	1,5	75	1,5 ... 12	Screw driver turn and lock	4	VRW6104111/**N
		CNOMO	8	2,0	89	1,5 ... 10	Screw driver turn and lock	4	VRW8104121/**N
		Interface***	6	1,5	50	1,5 ... 12	Screw driver turn and lock	2	VRW6103111/**N
		Interface***	8	2,0	80	1,5 ... 10	Screw driver turn and lock	2	VRW8103121/**N
		Interface***	8	2,5	100	2,0 ... 10	Screw driver turn and lock	2	VRW8103131/**N
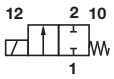		G1/4	6	1,5	75	1,5 ... 12	Without	3	VRW6102011/**N
		G1/4	8	2,0	104	1,5 ... 10	Without	3	VRW8102021/**N
		G1/4	8	2,5	152	2,0 ... 10	Without	3	VRW8102031/**N
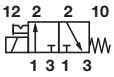	3/2 NC	G 1/8	6	1,5	75	1,5 ... 12	Screw driver turn and lock	5	VRW6201111/**N
		G 1/8	8	2,0	104	1,5 ... 10	Screw driver turn and lock	5	VRW8201121/**N
		G 1/8	8	2,5	152	2,0 ... 10	Screw driver turn and lock	5	VRW8201131/**N
		CNOMO	6	1,5	75	1,5 ... 12	Screw driver turn and lock	8	VRW6204111/**N
		CNOMO	8	2,0	89	1,5 ... 10	Screw driver turn and lock	8	VRW8204121/**N
		Interface***	6	1,5	50	1,5 ... 12	Screw driver turn and lock	6	VRW6203111/**N
		Interface***	8	2,0	80	1,5 ... 10	Screw driver turn and lock	6	VRW8203121/**N
		Interface***	8	2,5	100	2,0 ... 10	Screw driver turn and lock	6	VRW8203131/**N
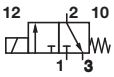		G1/4	6	1,5	75	1,5 ... 12	Without	7	VRW6202011/**N
		G1/4	8	2,0	104	1,5 ... 10	Without	7	VRW8202021/**N
		G1/4	8	2,5	152	2,0 ... 10	Without	7	VRW8202031/**N
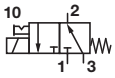	3/2 NO*	G 1/8	8	1,5	75	0 ... 10	Screw driver turn and lock	5	VRW8301111/**N
		CNOMO	8	1,5	75	0 ... 10	Screw driver turn and lock	8	VRW8304111/**N
		Interface***	8	1,5	50	0 ... 10	Screw driver turn and lock	6	VRW8303111/**N
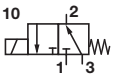		G1/4	8	1,5	75	0 ... 10	Without	7	VRW8302011/**N

* = Inlet is the stem port on the top of the coil
** = Insert voltage code, see below.
*** = See note *3) on option selector

Option selector

VRW★★0★★★1/★★N

Power	Substitute
6 Watt (orifice 1,5 mm)	**6**
8 Watt (orifice 1,5, 2 and 2,5 mm)	**8**

Function	Substitute
2/2 Normally closed (NC)	**1**
3/2 Normally closed (NC)	**2**
3/2 Normally open (NO) orifice 1,5 mm only. *2)	**3**

Base type	Substitute
G1/8	**1**
G1/4	**2**
Interface	**3**
CNOMO interface	**4**

Manual override	Substitute
Without	**0**
Screw driver turn and lock *1)	**1**

Voltage	Substitute
12 V d.c.	**12**
24 V d.c.	**24**
37,5 V d.c.	**37**
52 V d.c.	**52**
72 V d.c.	**72**
96 V d.c.	**96**
110 V d.c.	**11**

Orifice	Substitute
1,5 mm	**1**
2,0 mm	**2**
2,5 mm	**3**

*1) G1/4 valves are delivered without manual override only.

*2) If selecting a 3/2 Normally Open variant please note that the inlet must be via P3 (stem) and the outlet ist via P2, with exhaust via P1.

Other options are available, please contact our technical service.

*3) Interface version is not compliant to EN45545-2:2013 or NFF16-101

Our policy is one of continued research and development. We therefore reserve the right to amend, without notice, the specifications given in this document. (2010 - B5028f) © 2020 Norgren Ltd.

Accessories

Connector	Connector with moulded cable	
0570275	M/P 43315/1 (1 m)	
	M/P 43315/3 (3 m)	

To ensure IP65 integrity a compliant plug and gasket is to be fitted checking that the cable gland/wiring is terminated and sealed correcty.
The cable plug is fastened using M3 screw with a torque value of 0.4 - 0.6 Nm.

Dimensions

Dimensions in mm
Projection/First angle

1 2/2 valve G1/8 thread

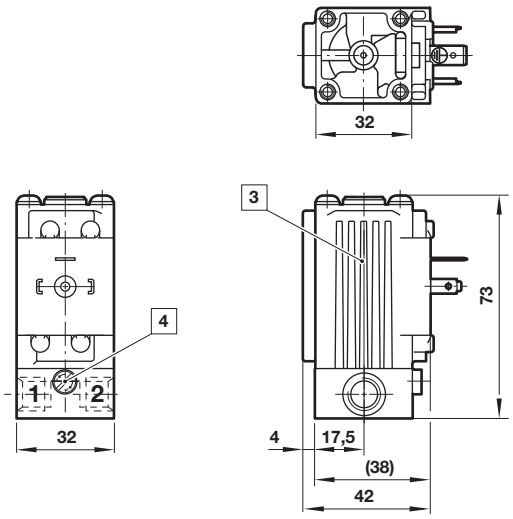

2 2/2 valve interface

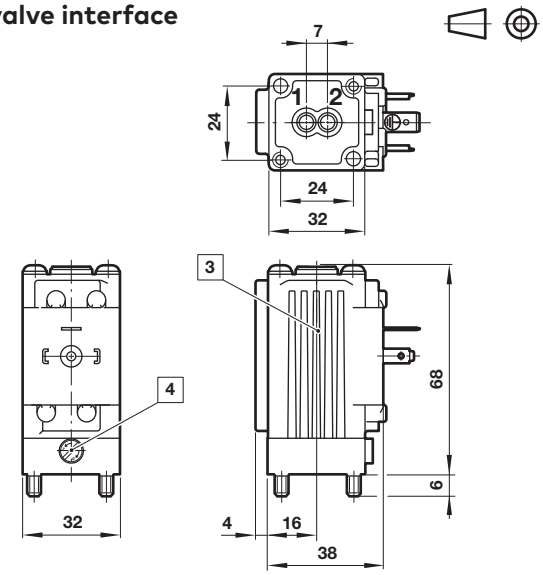

Two M4 x 75 mm fixing screws (hex socket) included as standard in scope of supply.Installation torque: 1.25 to 1.50 Nm

3 2/2 valve G1/4 thread

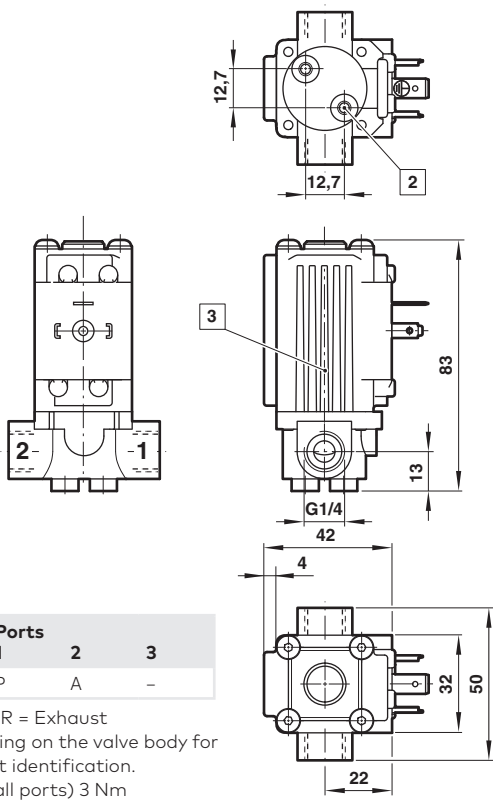

	Ports 1	2	3
2/2 NC	P	A	–

P = Inlet; A = Outlet; R = Exhaust
Please refer to marking on the valve body for flow direction or port identification.
Port fitting torque (all ports) 3 Nm

4 2/2 valve CNOMO interface

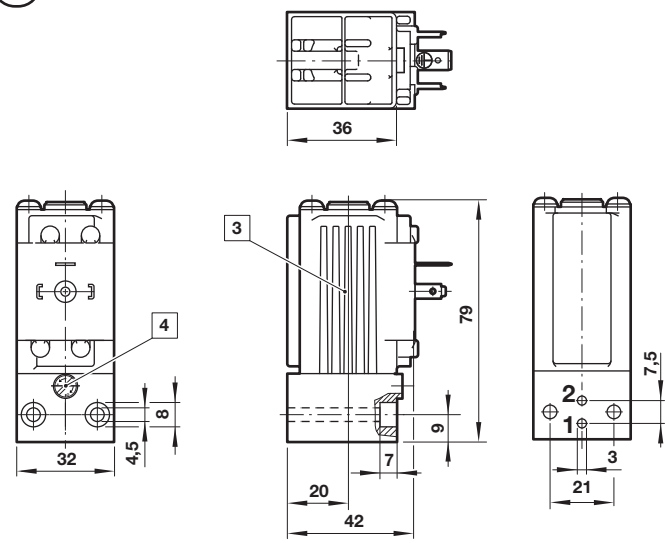

Two M4 x 35 mm fixing screws (cheese head) included as standard in scope of supply.
Installation torque: 1.25 to 1.50 Nm

2 M4 x 8 deep fixing threads
3 Solenoid coil may be supplied rotated at 90° intervals. Contact technical services for drawing.
4 Manual override

Our policy is one of continued research and development. We therefore reserve the right to amend, without notice, the specifications given in this document. (2010 - B5028f) © 2020 Norgren Ltd.

Dimensions

Dimensions in mm
Projection/First angle

5 3/2 valve G1/8 thread

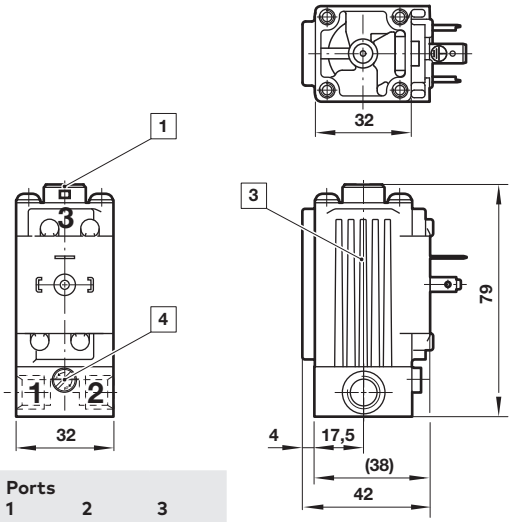

	Ports 1	2	3
3/2 NC	P	A	R
3/2 NO	R	A	P

P = Inlet; A = Outlet; R = Exhaust
Please refer to marking on the valve body for flow direction or port identification. Port fitting torque (all ports) 3 Nm

6 3/2 valve interface

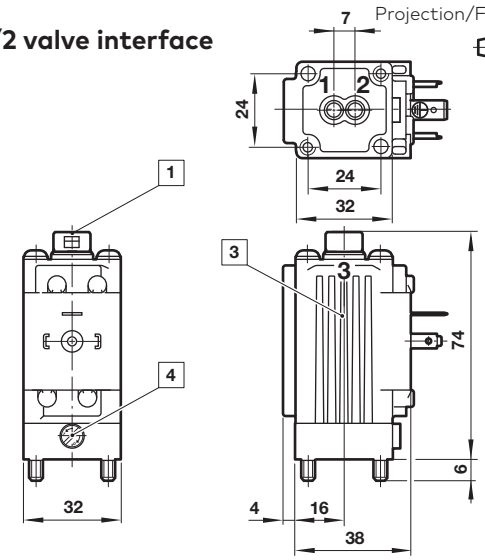

Two M4 x 75 mm fixing screws (hex socket) included as standard in scope of supply.
Installation torque: 1.25 to 1.50 Nm

7 3/2 valve G1/4 thread

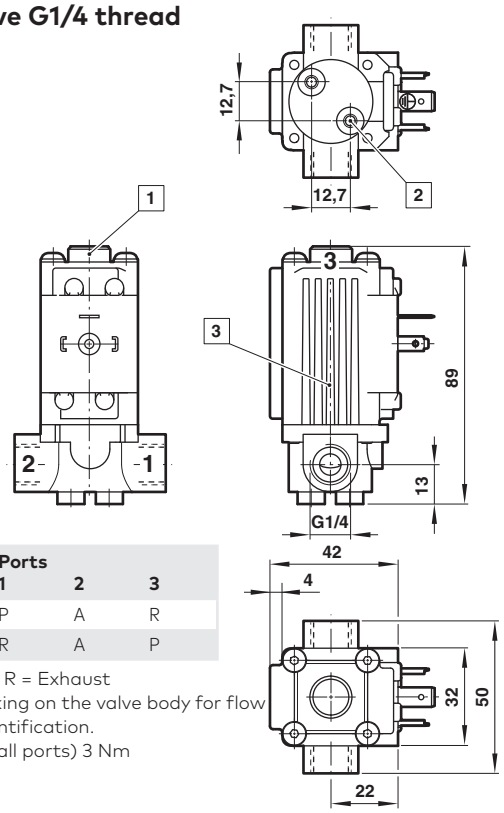

	Ports 1	2	3
3/2 NC	P	A	R
3/2 NO	R	A	P

P = Inlet; A = Outlet; R = Exhaust
Please refer to marking on the valve body for flow direction or port identification.
Port fitting torque (all ports) 3 Nm

8 3/2 valve CNOMO interface

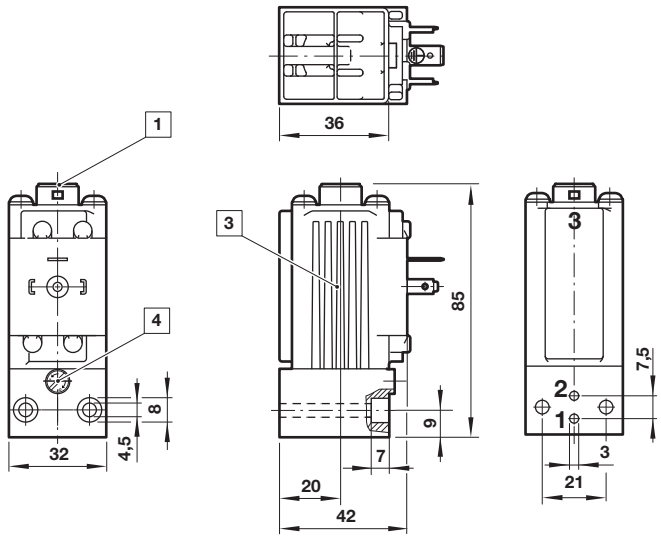

Two M4 x 35 mm fixing screws (cheese head) included as standard in scope of supply. Installation torque: 1.25 to 1.50 Nm

1 NC function with diffuser 3/2 valves only,
NO function inlet is the diffuser port
2 M4 x 8 deep fixing threads
3 Solenoid coil may be supplied rotated at 90° intervals. Contact technical services for drawing.
4 Manual override

Warning

These products are intended for use in industrial compressed air and rail transport systems only. Do not use these products where pressures and temperatures can exceed those listed under »**Technical features/data**«. Before using these products with fluids other than those specified, for non-industrial applications, life-support systems or other applications not within published specifications, consult Norgren Ltd.

Through misuse, age, or malfunction, components used in fluid power systems can fail in various modes.

The system designer is warned to consider the failure modes of all component parts used in fluid power systems and to provide adequate safeguards to prevent personal injury or damage to equipment in the event of such failure.
System designers must provide a warning to end users in the system instructional manual if protection against a failure mode cannot be adequately provided.
System designers and end users are cautioned to review specific warnings found in instruction sheets packed and shipped with these products.

Our policy is one of continued research and development. We therefore reserve the right to amend, without notice, the specifications given in this document. (2010 - B5028f) © 2020 Norgren Ltd.