- Balanced valve design for optimum pressure control
- Push to lock adjusting knob with tamper resistant accessory
- Wide temperature range
- Shock and vibration tested to EN 61373, Category 1, class A and B

Technical features

Medium:
Compressed air
Pressure range:
0,3 ...10 bar (4.3 ... 145 psi)
Other pressure ranges see option selector

Maximum inlet pressure:
20 bar (290 psi)

Ambient/Media temperature:
-25 ... +65°C max.
(-13 ... +150°F max.)
Air supply must be dry enough to avoid ice formation at temperatures below +2°C (+35°F).

Material:
Body: anodized aluminium
Bonnet: acetal
Valve: brass
Elastomers: NBR

Technical data - Standard version; knob actuated

Symbol	Operating pressure (bar)	(psi)	Flow (dm³/s)	(scfm)	Diaphragm	Weight (kg)	(lb)	Model
	0,3 ... 10	4.3 ... 145	23	49	Relieving	0,4	0,88	LR72Z-0GK-RMN

* Typical flow at 10 bar (145 psi) inlet pressure, 6,3 bar (90 psi) set pressure and 0,5 bar (7 psi) droop from set.

Option selector

LR72Z-0★★-★★N

Version	Substitute
General purpose (standard)	G
Reverse full flow	R

Adjustment	Substitute
Knob (standard)	K
Screw	S
T-handle	T

Pressure range	Substitute
0,3 ... 2 bar (4,3 ... 29 psi)	C
0,3 ... 4 bar (4,3 ... 58 psi)	F
0,3 ... 10 bar (4,3 ... 145 psi)	M

Diaphragm	Substitute
Relieving	R
Non relieving	N

Flow characteristics

Regulating range
0,3 ... 10 bar (4,3 ... 145 psi)

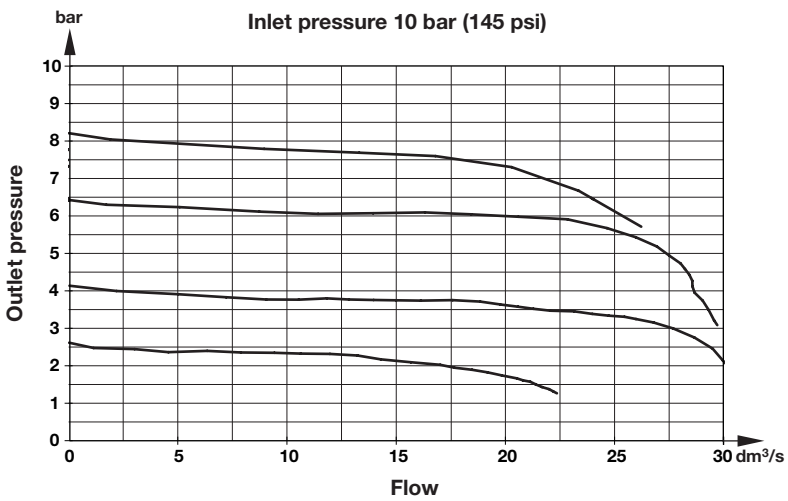

Our policy is one of continued research and development. We therefore reserve the right to amend, without notice, the specifications given in this document. (2015 - B8027b) © 2015 Norgren China

Accessories

Tamper resistant cover & seal wire	Service kit
4255-51	A1333-S01 (relieving)
	A1333-S02 (non-relieving)

Dimensions

Dimensions shown in mm
Projection/First angle

Knob adjustable

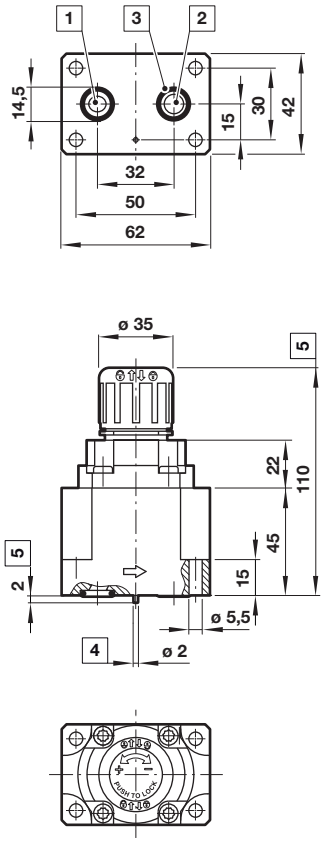

Screw adjustable

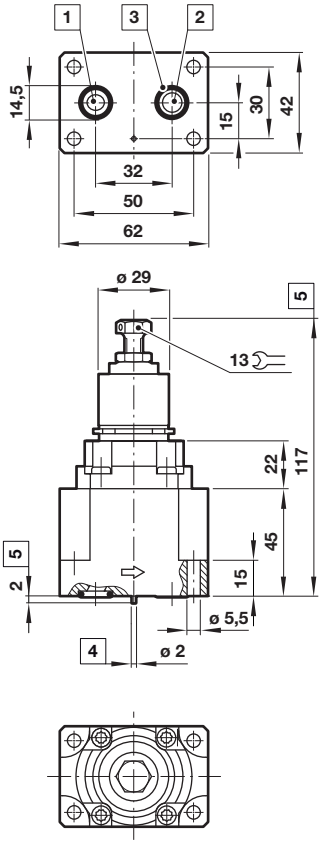

T-handle adjustable

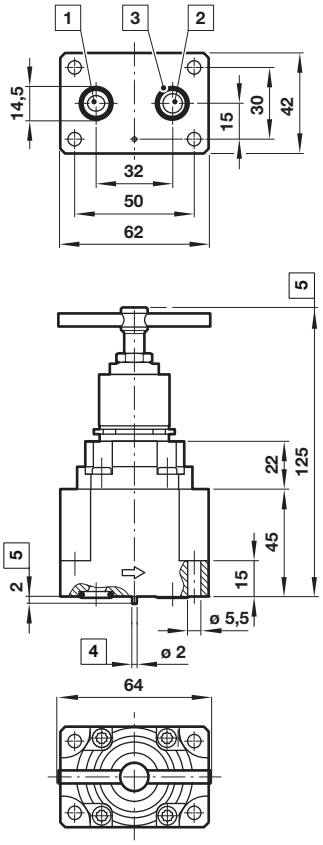

1 Inlet port
2 Outlet port
3 'O'-rings are in scope of delivery
4 Position pin
5 Reference

Warning

These products are intended for use in industrial compressed air and rail transport systems only. Do not use these products where pressures and temperatures can exceed those listed under **»Technical features/data«**.
Before using these products with fluids other than those specified, for non-industrial applications, life-support systems, or other applications not within published specifications, consult NORGREN.

Through misuse, age, or malfunction, components used in fluid power systems can fail in various modes.

The system designer is warned to consider the failure modes of all component parts used in fluid power systems and to provide adequate safeguards to prevent personal injury or damage to equipment in the event of such failure.
System designers must provide a warning to end users in the system instructional manual if protection against a failure mode cannot be adequately provided.
System designers and end users are cautioned to review specific warnings found in instruction sheets packed and shipped with these products.

Our policy is one of continued research and development. We therefore reserve the right to amend, without notice, the specifications given in this document. (2015 - B8027b) © 2015 Norgren China