VS18 series, 2 x 2/2, 2 x 3/2, 5/2 or 5/3 ISO valve island

- Modular system offering a wide range of configuration options conforming to ISO 15407-2, 18 mm wide valves
- 24 V d.c. or 115 V a.c. Multipole and single station sub-base
- Integrated Fieldbus, Industrial Ethernet and IO-Link
- Fieldbus expandable with single add-on stations, Industrial Ethernet and IO-Link expandable with double add-on stations.
- Wide range of accessories including shut off valves enabling non-stop operation
- Dual spool technology
  - Glandless spool and sleeve for long life
  - Softseal spool for high flow
- Up to 40 solenoids, operating at 16 bar pressure
- UL and ATEX

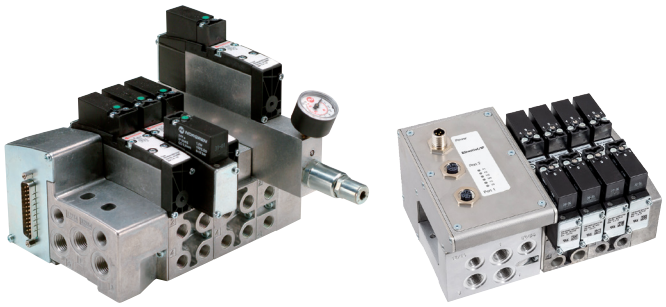

To configure and order a Valve Island visit:
https://www.norgren.com/uk/en/vic_landing.aspx

Technical features

Medium:
Compressed air, filtered to 40 µm, lubricated or non-lubricated
Operation:
VS18G: Glandless spool valve, solenoid pilot actuated
VS18S: Softseal spool valve, solenoid pilot actuated

Flow:
Softseal

Function	l/min	Cv	Kv
2 x 2/2	550	0,56	0,46
2 x 3/2	600	0,61	0,52
5/2; 5/3	650	0,66	0,57
Glandless			
5/2; 5/3	550	0,56	0,48

Mounting:
Sub-base
Ports 2+4:
G1/8, NPTF 1/8, PIF 8 mm, PIF 6 mm, PIF 1/4

Operating pressure:
Maximum pressure
10 bar (145 psi) VS18S models and VS18G solenoid pilot actuated
valves with internal pilot supply
16 bar (232 psi) VS18G solenoid pilot actuated valves with external pilot supply
Media/Ambient temperature:
-15 ... +50°C (+5 ... 122°F) (Ambient)
-5 ... +50°C (+23 ... 122°F) (Media)
Air supply must be dry enough to avoid ice formation at temperatures below +2°C (+35°F).

Materials:
Body/sub-base:
Die-cast aluminium
Glandless spool & sleeve (VS18G): Aluminium, hard anodised, PTFE coated
Softseal spool (VS18S): Aluminium with HNBR seals
Plastic parts: POM, PA, PPA
Mounting sheets/screws: Steel, zinc coated
Springs: Stainless steel
Sandwich plates: Aluminium bar material, PA
Electrical contacts: Brass, tin coated
PCB: Glass epoxy

Our policy is one of continued research and development. We therefore reserve the right to amend, without notice, the specifications given in this document. (2005 - 5003g) © 2020 IMI International s.r.o.

Technical data
2 x 2/2 Double solenoid actuated softseal valves (flow 550 l/min)

Symbol	Function 2 x 2/2	Actuation/ return	Pilot supply	Pilot pressure (bar)	Operating pressure (bar)	Manual override	Voltage	Model
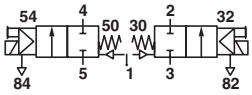	NC	Sol/Spring	Internal	2,5 ... 10*1)	-0,9 ... 10	Push only	24 V d.c. 1,2 W	VS18SE11DF313A
	NC	Sol/Spring	Internal	2,5 ... 10*1)	-0,9 ... 10	Push only	115 V a.c. 1,5 VA	VS18SE11DF318A
	NC	Sol/Spring	Internal	2,5 ... 10*1)	-0,9 ... 10	Push & turn	24 V d.c. 1,2 W	VS18SE11DF213A
	NC	Sol/Spring	Internal	2,5 ... 10*1)	-0,9 ... 10	Push & turn	115 V a.c. 1,5 VA	VS18SE11DF218A
	NC	Sol/Spring	Internal	2,5 ... 10*1)	-0,9 ... 10	Extended, Push only	24 V d.c. 1,2 W	VS18SE11DF513A
	NC	Sol/Spring	Internal	2,5 ... 10*1)	-0,9 ... 10	Extended, Push only	115 V a.c. 1,5 VA	VS18SE11DF518A
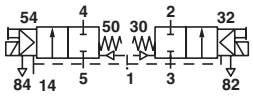	NC	Sol/Spring	External	1,7 + (0,5 x press. port1)*2)	-0,9 ... 10	Push only	24 V d.c. 1,2 W	VS18SE22DF313A
	NC	Sol/Spring	External	1,7 + (0,5 x press. port1)*2)	-0,9 ... 10	Push only	115 V a.c. 1,5 VA	VS18SE22DF318A
	NC	Sol/Spring	External	1,7 + (0,5 x press. port1)*2)	-0,9 ... 10	Push & turn	24 V d.c. 1,2 W	VS18SE22DF213A
	NC	Sol/Spring	External	1,7 + (0,5 x press. port1)*2)	-0,9 ... 10	Push & turn	115 V a.c. 1,5 VA	VS18SE22DF218A
	NC	Sol/Spring	External	1,7 + (0,5 x press. port1)*2)	-0,9 ... 10	Extended, Push only	24 V d.c. 1,2 W	VS18SE22DF513A
	NC	Sol/Spring	External	1,7 + (0,5 x press. port1)*2)	-0,9 ... 10	Extended, Push only	115 V a.c. 1,5 VA	VS18SE22DF518A
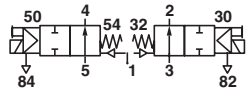	NO	Sol/Spring	Internal	2,5 ... 10*1)	-0,9 ... 10	Push only	24 V d.c. 1,2 W	VS18SF11DF313A
	NO	Sol/Spring	Internal	2,5 ... 10*1)	-0,9 ... 10	Push only	115 V a.c. 1,5 VA	VS18SF11DF318A
	NO	Sol/Spring	Internal	2,5 ... 10*1)	-0,9 ... 10	Push & turn	24 V d.c. 1,2 W	VS18SF11DF213A
	NO	Sol/Spring	Internal	2,5 ... 10*1)	-0,9 ... 10	Push & turn	115 V a.c. 1,5 VA	VS18SF11DF218A
	NO	Sol/Spring	Internal	2,5 ... 10*1)	-0,9 ... 10	Extended, Push only	24 V d.c. 1,2 W	VS18SF11DF513A
	NO	Sol/Spring	Internal	2,5 ... 10*1)	-0,9 ... 10	Extended, Push only	115 V a.c. 1,5 VA	VS18SF11DF518A
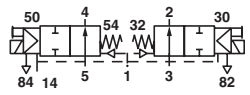	NO	Sol/Spring	External	1,7 + (0,5 x press. port1)*2)	-0,9 ... 10	Push only	24 V d.c. 1,2 W	VS18SF22DF313A
	NO	Sol/Spring	External	1,7 + (0,5 x press. port1)*2)	-0,9 ... 10	Push only	115 V a.c. 1,5 VA	VS18SF22DF318A
	NO	Sol/Spring	External	1,7 + (0,5 x press. port1)*2)	-0,9 ... 10	Push & turn	24 V d.c. 1,2 W	VS18SF22DF213A
	NO	Sol/Spring	External	1,7 + (0,5 x press. port1)*2)	-0,9 ... 10	Push & turn	115 V a.c. 1,5 VA	VS18SF22DF218A
	NO	Sol/Spring	External	1,7 + (0,5 x press. port1)*2)	-0,9 ... 10	Extended, Push only	24 V d.c. 1,2 W	VS18SF22DF513A
	NO	Sol/Spring	External	1,7 + (0,5 x press. port1)*2)	-0,9 ... 10	Extended, Push only	115 V a.c. 1,5 VA	VS18SF22DF518A
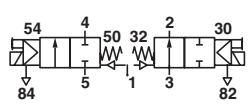	NO/NC	Sol/Spring	Internal	2,5 ... 10*1)	-0,9 ... 10	Push only	24 V d.c. 1,2 W	VS18SG11DF313A
	NO/NC	Sol/Spring	Internal	2,5 ... 10*1)	-0,9 ... 10	Push only	115 V a.c. 1,5 VA	VS18SG11DF318A
	NO/NC	Sol/Spring	Internal	2,5 ... 10*1)	-0,9 ... 10	Push & turn	24 V d.c. 1,2 W	VS18SG11DF213A
	NO/NC	Sol/Spring	Internal	2,5 ... 10*1)	-0,9 ... 10	Push & turn	115 V a.c. 1,5 VA	VS18SG11DF218A
	NO/NC	Sol/Spring	Internal	2,5 ... 10*1)	-0,9 ... 10	Extended, Push only	24 V d.c. 1,2 W	VS18SG11DF513A
	NO/NC	Sol/Spring	Internal	2,5 ... 10*1)	-0,9 ... 10	Extended, Push only	115 V a.c. 1,5 VA	VS18SG11DF518A
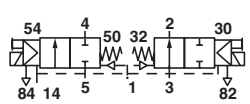	NO/NC	Sol/Spring	External	1,7 + (0,5 x press. port1)*2)	-0,9 ... 10	Push only	24 V d.c. 1,2 W	VS18SG22DF313A
	NO/NC	Sol/Spring	External	1,7 + (0,5 x press. port1)*2)	-0,9 ... 10	Push only	115 V a.c. 1,5 VA	VS18SG22DF318A
	NO/NC	Sol/Spring	External	1,7 + (0,5 x press. port1)*2)	-0,9 ... 10	Push & turn	24 V d.c. 1,2 W	VS18SG22DF213A
	NO/NC	Sol/Spring	External	1,7 + (0,5 x press. port1)*2)	-0,9 ... 10	Push & turn	115 V a.c. 1,5 VA	VS18SG22DF218A
	NO/NC	Sol/Spring	External	1,7 + (0,5 x press. port1)*2)	-0,9 ... 10	Extended, Push only	24 V d.c. 1,2 W	VS18SG22DF513A
	NO/NC	Sol/Spring	External	1,7 + (0,5 x press. port1)*2)	-0,9 ... 10	Extended, Push only	115 V a.c. 1,5 VA	VS18SG22DF518A

Valve dimensions see page 8
NO = Normally open, NC = Normally closed
*1) Pilot air supply through port 1
*2) Pilot air supply through port 12/14

Our policy is one of continued research and development. We therefore reserve the right to amend, without notice, the specifications given in this document. (2005 - 5003g) © 2020 IMI International s.r.o.

2 x 3/2 Double solenoid actuated softseal valves (flow 600 l/min)

Symbol	Function 2 x 3/2	Actuation/ return	Pilot supply	Pilot pressure (bar)	Operating pressure (bar)	Manual override	Voltage	Model
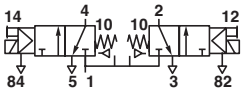	NC	Sol/Spring	Internal	–	2,5 ... 10	Push only	24 V d.c. 1,2 W	VS18SA11DF313A
	NC	Sol/Spring	Internal	–	2,5 ... 10	Push only	115 V a.c. 1,5 VA	VS18SA11DF318A
	NC	Sol/Spring	Internal	–	2,5 ... 10	Push & turn	24 V d.c. 1,2 W	VS18SA11DF213A
	NC	Sol/Spring	Internal	–	2,5 ... 10	Push & turn	115 V a.c. 1,5 VA	VS18SA11DF218A
	NC	Sol/Spring	Internal	–	2,5 ... 10	Extended, Push only	24 V d.c. 1,2 W	VS18SA11DF513A
	NC	Sol/Spring	Internal	–	2,5 ... 10	Extended, Push only	115 V a.c. 1,5 VA	VS18SA11DF518A
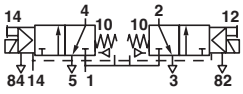	NC	Sol/Spring	External	1,7 + (0,35 x op. press.)	0 ... 10	Push only	24 V d.c. 1,2 W	VS18SA22DF313A
	NC	Sol/Spring	External	1,7 + (0,35 x op. press.)	0 ... 10	Push only	115 V a.c. 1,5 VA	VS18SA22DF318A
	NC	Sol/Spring	External	1,7 + (0,35 x op. press.)	0 ... 10	Push & turn	24 V d.c. 1,2 W	VS18SA22DF213A
	NC	Sol/Spring	External	1,7 + (0,35 x op. press.)	0 ... 10	Push & turn	115 V a.c. 1,5 VA	VS18SA22DF218A
	NC	Sol/Spring	External	1,7 + (0,35 x op. press.)	0 ... 10	Extended, Push only	24 V d.c. 1,2 W	VS18SA22DF513A
	NC	Sol/Spring	External	1,7 + (0,35 x op. press.)	0 ... 10	Extended, Push only	115 V a.c. 1,5 VA	VS18SA22DF518A
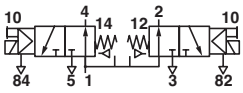	NO	Sol/Spring	Internal	–	2,5 ... 10	Push only	24 V d.c. 1,2 W	VS18SB11DF313A
	NO	Sol/Spring	Internal	–	2,5 ... 10	Push only	115 V a.c. 1,5 VA	VS18SB11DF318A
	NO	Sol/Spring	Internal	–	2,5 ... 10	Push & turn	24 V d.c. 1,2 W	VS18SB11DF213A
	NO	Sol/Spring	Internal	–	2,5 ... 10	Push & turn	115 V a.c. 1,5 VA	VS18SB11DF218A
	NO	Sol/Spring	Internal	–	2,5 ... 10	Extended, Push only	24 V d.c. 1,2 W	VS18SB11DF513A
	NO	Sol/Spring	Internal	–	2,5 ... 10	Extended, Push only	115 V a.c. 1,5 VA	VS18SB11DF518A
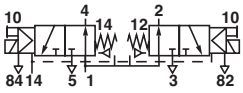	NO	Sol/Spring	External	1,7 + (0,35 x op. press.)	0 ... 10	Push only	24 V d.c. 1,2 W	VS18SB22DF313A
	NO	Sol/Spring	External	1,7 + (0,35 x op. press.)	0 ... 10	Push only	115 V a.c. 1,5 VA	VS18SB22DF318A
	NO	Sol/Spring	External	1,7 + (0,35 x op. press.)	0 ... 10	Push & turn	24 V d.c. 1,2 W	VS18SB22DF213A
	NO	Sol/Spring	External	1,7 + (0,35 x op. press.)	0 ... 10	Push & turn	115 V a.c. 1,5 VA	VS18SB22DF218A
	NO	Sol/Spring	External	1,7 + (0,35 x op. press.)	0 ... 10	Extended, Push only	24 V d.c. 1,2 W	VS18SB22DF513A
	NO	Sol/Spring	External	1,7 + (0,35 x op. press.)	0 ... 10	Extended, Push only	115 V a.c. 1,5 VA	VS18SB22DF518A
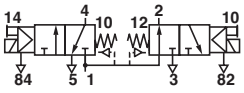	NO/NC	Sol/Spring	Internal	–	2,5 ... 10	Push only	24 V d.c. 1,2 W	VS18SC11DF313A
	NO/NC	Sol/Spring	Internal	–	2,5 ... 10	Push only	115 V a.c. 1,5 VA	VS18SC11DF318A
	NO/NC	Sol/Spring	Internal	–	2,5 ... 10	Push & turn	24 V d.c. 1,2 W	VS18SC11DF213A
	NO/NC	Sol/Spring	Internal	–	2,5 ... 10	Push & turn	115 V a.c. 1,5 VA	VS18SC11DF218A
	NO/NC	Sol/Spring	Internal	–	2,5 ... 10	Extended, Push only	24 V d.c. 1,2 W	VS18SC11DF513A
	NO/NC	Sol/Spring	Internal	–	2,5 ... 10	Extended, Push only	115 V a.c. 1,5 VA	VS18SC11DF518A
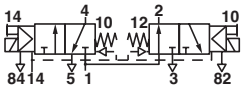	NO/NC	Sol/Spring	External	1,7 + (0,35 x op. press.)	0 ... 10	Push only	24 V d.c. 1,2 W	VS18SC22DF313A
	NO/NC	Sol/Spring	External	1,7 + (0,35 x op. press.)	0 ... 10	Push only	115 V a.c. 1,5 VA	VS18SC22DF318A
	NO/NC	Sol/Spring	External	1,7 + (0,35 x op. press.)	0 ... 10	Push & turn	24 V d.c. 1,2 W	VS18SC22DF213A
	NO/NC	Sol/Spring	External	1,7 + (0,35 x op. press.)	0 ... 10	Push & turn	115 V a.c. 1,5 VA	VS18SC22DF218A
	NO/NC	Sol/Spring	External	1,7 + (0,35 x op. press.)	0 ... 10	Extended, Push only	24 V d.c. 1,2 W	VS18SC22DF513A
	NO/NC	Sol/Spring	External	1,7 + (0,35 x op. press.)	0 ... 10	Extended, Push only	115 V a.c. 1,5 VA	VS18SC22DF518A

Valve dimensions see page 8
NO = Normally open, NC = Normally closed

Our policy is one of continued research and development. We therefore reserve the right to amend, without notice, the specifications given in this document. (2005 - 5003g) © 2020 IMI International s.r.o.

5/2 Single and double solenoid actuated glandless valves (flow 550 l/min)

Symbol	Actuation/ return	Pilot supply	Pilot pressure (bar)	Operating pressure (bar)	Manual override	Voltage	Model
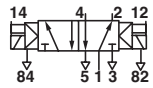	Sol/Sol	Internal	–	2 ... 10	Push only	24 V d.c. 1,2 W	VS18G511DF313A
	Sol/Sol	Internal	–	2 ... 10	Push only	115 V a.c. 1,5 VA	VS18G511DF318A
	Sol/Sol	Internal	–	2 ... 10	Push & turn	24 V d.c. 1,2 W	VS18G511DF213A
	Sol/Sol	Internal	–	2 ... 10	Push & turn	115 V a.c. 1,5 VA	VS18G511DF218A
	Sol/Sol	Internal	–	2 ... 10	Extended, Push only	24 V d.c. 1,2 W	VS18G511DF513A
	Sol/Sol	Internal	–	2 ... 10	Extended, Push only	115 V a.c. 1,5 VA	VS18G511DF518A
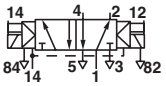	Sol/Sol	External	2 ... 10	-0,9 ... 16	Push only	24 V d.c. 1,2 W	VS18G522DF313A
	Sol/Sol	External	2 ... 10	-0,9 ... 16	Push only	115 V a.c. 1,5 VA	VS18G522DF318A
	Sol/Sol	External	2 ... 10	-0,9 ... 16	Push & turn	24 V d.c. 1,2 W	VS18G522DF213A
	Sol/Sol	External	2 ... 10	-0,9 ... 16	Push & turn	115 V a.c. 1,5 VA	VS18G522DF218A
	Sol/Sol	External	2 ... 10	-0,9 ... 16	Extended, Push only	24 V d.c. 1,2 W	VS18G522DF513A
	Sol/Sol	External	2 ... 10	-0,9 ... 16	Extended, Push only	115 V a.c. 1,5 VA	VS18G522DF518A
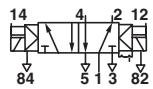	Sol(Priority)/Sol	Internal	–	2 ... 10	Push only	24 V d.c. 1,2 W	VS18G591DF313A
	Sol(Priority)/Sol	Internal	–	2 ... 10	Push only	115 V a.c. 1,5 VA	VS18G591DF318A
	Sol(Priority)/Sol	Internal	–	2 ... 10	Push & turn	24 V d.c. 1,2 W	VS18G591DF213A
	Sol(Priority)/Sol	Internal	–	2 ... 10	Push & turn	115 V a.c. 1,5 VA	VS18G591DF218A
	Sol(Priority)/Sol	Internal	–	2 ... 10	Extended, Push only	24 V d.c. 1,2 W	VS18G591DF513A
	Sol(Priority)/Sol	Internal	–	2 ... 10	Extended, Push only	115 V a.c. 1,5 VA	VS18G591DF518A
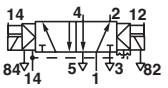	Sol(Priority)/Sol	External	2 ... 10	-0,9 ... 16	Push only	24 V d.c. 1,2 W	VS18G592DF313A
	Sol(Priority)/Sol	External	2 ... 10	-0,9 ... 16	Push only	115 V a.c. 1,5 VA	VS18G592DF318A
	Sol(Priority)/Sol	External	2 ... 10	-0,9 ... 16	Push & turn	24 V d.c. 1,2 W	VS18G592DF213A
	Sol(Priority)/Sol	External	2 ... 10	-0,9 ... 16	Push & turn	115 V a.c. 1,5 VA	VS18G592DF218A
	Sol(Priority)/Sol	External	2 ... 10	-0,9 ... 16	Extended, Push only	24 V d.c. 1,2 W	VS18G592DF513A
	Sol(Priority)/Sol	External	2 ... 10	-0,9 ... 16	Extended, Push only	115 V a.c. 1,5 VA	VS18G592DF518A
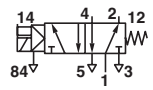	Sol/Spring	Internal	–	1,6 ... 10	Push only	24 V d.c. 1,2 W	VS18G517DF313A
	Sol/Spring	Internal	–	1,6 ... 10	Push only	115 V a.c. 1,5 VA	VS18G517DF318A
	Sol/Spring	Internal	–	1,6 ... 10	Push & turn	24 V d.c. 1,2 W	VS18G517DF213A
	Sol/Spring	Internal	–	1,6 ... 10	Push & turn	115 V a.c. 1,5 VA	VS18G517DF218A
	Sol/Spring	Internal	–	1,6 ... 10	Extended, Push only	24 V d.c. 1,2 W	VS18G517DF513A
	Sol/Spring	Internal	–	1,6 ... 10	Extended, Push only	115 V a.c. 1,5 VA	VS18G517DF518A
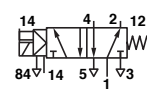	Sol/Spring	External	1,6 ... 10	-0,9 ... 16	Push only	24 V d.c. 1,2 W	VS18G527DF313A
	Sol/Spring	External	1,6 ... 10	-0,9 ... 16	Push only	115 V a.c. 1,5 VA	VS18G527DF318A
	Sol/Spring	External	1,6 ... 10	-0,9 ... 16	Push & turn	24 V d.c. 1,2 W	VS18G527DF213A
	Sol/Spring	External	1,6 ... 10	-0,9 ... 16	Push & turn	115 V a.c. 1,5 VA	VS18G527DF218A
	Sol/Spring	External	1,6 ... 10	-0,9 ... 16	Extended, Push only	24 V d.c. 1,2 W	VS18G527DF513A
	Sol/Spring	External	1,6 ... 10	-0,9 ... 16	Extended, Push only	115 V a.c. 1,5 VA	VS18G527DF518A

Valve dimensions see page 8

Our policy is one of continued research and development. We therefore reserve the right to amend, without notice, the specifications given in this document. (2005 - 5003g) © 2020 IMI International s.r.o.

5/2 Single and double solenoid actuated softseal valves (flow 650 l/min)

Symbol	Actuation/ return	Pilot supply	Pilot pressure (bar)	Operating pressure (bar)	Manual override	Voltage	Model
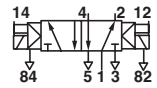	Sol/Sol	Internal	–	2 ... 10	Push only	24 V d.c. 1,2 W	VS18S511DF313A
	Sol/Sol	Internal	–	2 ... 10	Push only	115 V a.c. 1,5 VA	VS18S511DF318A
	Sol/Sol	Internal	–	2 ... 10	Push & turn	24 V d.c. 1,2 W	VS18S511DF213A
	Sol/Sol	Internal	–	2 ... 10	Push & turn	115 V a.c. 1,5 VA	VS18S511DF218A
	Sol/Sol	Internal	–	2 ... 10	Extended, Push only	24 V d.c. 1,2 W	VS18S511DF513A
	Sol/Sol	Internal	–	2 ... 10	Extended, Push only	115 V a.c. 1,5 VA	VS18S511DF518A
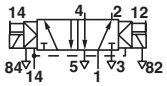	Sol/Sol	External	2 ... 10	-0,9 ... 10	Push only	24 V d.c. 1,2 W	VS18S522DF313A
	Sol/Sol	External	2 ... 10	-0,9 ... 10	Push only	115 V a.c. 1,5 VA	VS18S522DF318A
	Sol/Sol	External	2 ... 10	-0,9 ... 10	Push & turn	24 V d.c. 1,2 W	VS18S522DF213A
	Sol/Sol	External	2 ... 10	-0,9 ... 10	Push & turn	115 V a.c. 1,5 VA	VS18S522DF218A
	Sol/Sol	External	2 ... 10	-0,9 ... 10	Extended, Push only	24 V d.c. 1,2 W	VS18S522DF513A
	Sol/Sol	External	2 ... 10	-0,9 ... 10	Extended, Push only	115 V a.c. 1,5 VA	VS18S522DF518A
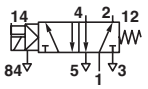	Sol/Spring	Internal	–	2 ... 10	Push only	24 V d.c. 1,2 W	VS18S517DF313A
	Sol/Spring	Internal	–	2 ... 10	Push only	115 V a.c. 1,5 VA	VS18S517DF318A
	Sol/Spring	Internal	–	2 ... 10	Push & turn	24 V d.c. 1,2 W	VS18S517DF213A
	Sol/Spring	Internal	–	2 ... 10	Push & turn	115 V a.c. 1,5 VA	VS18S517DF218A
	Sol/Spring	Internal	–	2 ... 10	Extended, Push only	24 V d.c. 1,2 W	VS18S517DF513A
	Sol/Spring	Internal	–	2 ... 10	Extended, Push only	115 V a.c. 1,5 VA	VS18S517DF518A
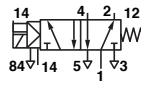	Sol/Spring	External	2 ... 10	-0,9 ... 10	Push only	24 V d.c. 1,2 W	VS18S527DF313A
	Sol/Spring	External	2 ... 10	-0,9 ... 10	Push only	115 V a.c. 1,5 VA	VS18S527DF318A
	Sol/Spring	External	2 ... 10	-0,9 ... 10	Push & turn	24 V d.c. 1,2 W	VS18S527DF213A
	Sol/Spring	External	2 ... 10	-0,9 ... 10	Push & turn	115 V a.c. 1,5 VA	VS18S527DF218A
	Sol/Spring	External	2 ... 10	-0,9 ... 10	Extended, Push only	24 V d.c. 1,2 W	VS18S527DF513A
	Sol/Spring	External	2 ... 10	-0,9 ... 10	Extended, Push only	115 V a.c. 1,5 VA	VS18S527DF518A

5/3 Double solenoid actuated glandless valves (flow 550 l/min)

Symbol	Function	Actuation/ return	Pilot supply	Pilot pressure (bar)	Operating pressure (bar)	Manual override	Voltage	Model
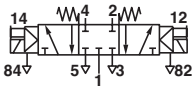	APB	Sol/Sol	Internal	–	2 ... 10	Push only	24 V d.c. 1,2 W	VS18G611DF313A
	APB	Sol/Sol	Internal	–	2 ... 10	Push only	115 V a.c. 1,5 VA	VS18G611DF318A
	APB	Sol/Sol	Internal	–	2 ... 10	Push & turn	24 V d.c. 1,2 W	VS18G611DF213A
	APB	Sol/Sol	Internal	–	2 ... 10	Push & turn	115 V a.c. 1,5 VA	VS18G611DF218A
	APB	Sol/Sol	Internal	–	2 ... 10	Extended, Push only	24 V d.c. 1,2 W	VS18G611DF513A
	APB	Sol/Sol	Internal	–	2 ... 10	Extended, Push only	115 V a.c. 1,5 VA	VS18G611DF518A
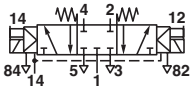	APB	Sol/Sol	External	2 ... 10	-0,9 ... 16	Push only	24 V d.c. 1,2 W	VS18G622DF313A
	APB	Sol/Sol	External	2 ... 10	-0,9 ... 16	Push only	115 V a.c. 1,5 VA	VS18G622DF318A
	APB	Sol/Sol	External	2 ... 10	-0,9 ... 16	Push & turn	24 V d.c. 1,2 W	VS18G622DF213A
	APB	Sol/Sol	External	2 ... 10	-0,9 ... 16	Push & turn	115 V a.c. 1,5 VA	VS18G622DF218A
	APB	Sol/Sol	External	2 ... 10	-0,9 ... 16	Extended, Push only	24 V d.c. 1,2 W	VS18G622DF513A
	APB	Sol/Sol	External	2 ... 10	-0,9 ... 16	Extended, Push only	115 V a.c. 1,5 VA	VS18G622DF518A
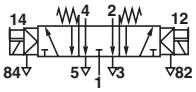	COE	Sol/Sol	Internal	–	2 ... 10	Push only	24 V d.c. 1,2 W	VS18G711DF313A
	COE	Sol/Sol	Internal	–	2 ... 10	Push only	115 V a.c. 1,5 VA	VS18G711DF318A
	COE	Sol/Sol	Internal	–	2 ... 10	Push & turn	24 V d.c. 1,2 W	VS18G711DF213A
	COE	Sol/Sol	Internal	–	2 ... 10	Push & turn	115 V a.c. 1,5 VA	VS18G711DF218A
	COE	Sol/Sol	Internal	–	2 ... 10	Extended, Push only	24 V d.c. 1,2 W	VS18G711DF513A
	COE	Sol/Sol	Internal	–	2 ... 10	Extended, Push only	115 V a.c. 1,5 VA	VS18G711DF518A
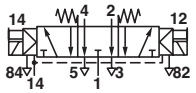	COE	Sol/Sol	External	2 ... 10	-0,9 ... 16	Push only	24 V d.c. 1,2 W	VS18G722DF313A
	COE	Sol/Sol	External	2 ... 10	-0,9 ... 16	Push only	115 V a.c. 1,5 VA	VS18G722DF318A
	COE	Sol/Sol	External	2 ... 10	-0,9 ... 16	Push & turn	24 V d.c. 1,2 W	VS18G722DF213A
	COE	Sol/Sol	External	2 ... 10	-0,9 ... 16	Push & turn	115 V a.c. 1,5 VA	VS18G722DF218A
	COE	Sol/Sol	External	2 ... 10	-0,9 ... 16	Extended, Push only	24 V d.c. 1,2 W	VS18G722DF513A
	COE	Sol/Sol	External	2 ... 10	-0,9 ... 16	Extended, Push only	115 V a.c. 1,5 VA	VS18G722DF518A

Valve dimensions see page 8
APB = All Ports Blocked
COE= Centre Open Exhaust

Our policy is one of continued research and development. We therefore reserve the right to amend, without notice, the specifications given in this document. (2005 - 5003g) © 2020 IMI International s.r.o.

5/3 Double solenoid actuated Softseal valves (flow 650 l/min)

Symbol	Function	Actuation/ return	Pilot supply	Pilot pressure (bar)	Operating pressure (bar)	Manual override	Voltage	Model
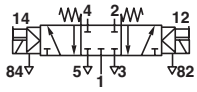	APB	Sol/Sol	Internal	–	2 ... 10	Push only	24 V d.c. 1,2 W	VS18S611DF313A
	APB	Sol/Sol	Internal	–	2 ... 10	Push only	115 V a.c. 1,5 VA	VS18S611DF318A
	APB	Sol/Sol	Internal	–	2 ... 10	Push & turn	24 V d.c. 1,2 W	VS18S611DF213A
	APB	Sol/Sol	Internal	–	2 ... 10	Push & turn	115 V a.c. 1,5 VA	VS18S611DF218A
	APB	Sol/Sol	Internal	–	2 ... 10	Extended, Push only	24 V d.c. 1,2 W	VS18S611DF513A
	APB	Sol/Sol	Internal	–	2 ... 10	Extended, Push only	115 V a.c. 1,5 VA	VS18S611DF518A
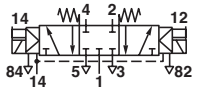	APB	Sol/Sol	External	2 ... 10	-0,9 ... 10	Push only	24 V d.c. 1,2 W	VS18S622DF313A
	APB	Sol/Sol	External	2 ... 10	-0,9 ... 10	Push only	115 V a.c. 1,5 VA	VS18S622DF318A
	APB	Sol/Sol	External	2 ... 10	-0,9 ... 10	Push & turn	24 V c.c. 1,2 W	VS18S622DF213A
	APB	Sol/Sol	External	2 ... 10	-0,9 ... 10	Push & turn	115 V a.c. 1,5 VA	VS18S622DF218A
	APB	Sol/Sol	External	2 ... 10	-0,9 ... 10	Extended, Push only	24 V d.c. 1,2 W	VS18S622DF513A
	APB	Sol/Sol	External	2 ... 10	-0,9 ... 10	Extended, Push only	115 V a.c. 1,5 VA	VS18S622DF518A
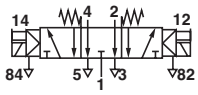	COE	Sol/Sol	Internal	–	2,5 ... 10	Push only	24 V d.c. 1,2 W	VS18S711DF313A
	COE	Sol/Sol	Internal	–	2,5 ... 10	Push only	115 V a.c. 1,5 VA	VS18S711DF318A
	COE	Sol/Sol	Internal	–	2,5 ... 10	Push & turn	24 V d.c. 1,2 W	VS18S711DF213A
	COE	Sol/Sol	Internal	–	2,5 ... 10	Push & turn	115 V a.c. 1,5 VA	VS18S711DF218A
	COE	Sol/Sol	Internal	–	2,5 ... 10	Extended, Push only	24 V d.c. 1,2 W	VS18S711DF513A
	COE	Sol/Sol	Internal	–	2,5 ... 10	Extended, Push only	115 V a.c. 1,5 VA	VS18S711DF518A
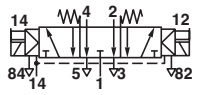	COE	Sol/Sol	External	2,5 ... 10	-0,9 ... 10	Push only	24 V d.c. 1,2 W	VS18S722DF313A
	COE	Sol/Sol	External	2,5 ... 10	-0,9 ... 10	Push only	115 V a.c. 1,5 VA	VS18S722DF318A
	COE	Sol/Sol	External	2,5 ... 10	-0,9 ... 10	Push & turn	24 V d.c. 1,2 W	VS18S722DF213A
	COE	Sol/Sol	External	2,5 ... 10	-0,9 ... 10	Push & turn	115 V a.c. 1,5 VA	VS18S722DF218A
	COE	Sol/Sol	External	2,5 ... 10	-0,9 ... 10	Extended, Push only	24 V d.c. 1,2 W	VS18S722DF513A
	COE	Sol/Sol	External	2,5 ... 10	-0,9 ... 10	Extended, Push only	115 V a.c. 1,5 VA	VS18S722DF518A

Valve dimensions see page 8
APB = All Ports Blocked
COE= Centre Open Exhaust

Options selector for valve slices

VS18★★★★DF★★★★

Spool technology	Substitute
Glandless spool & sleeve	G
Softseal spool	S
Guiding systems	**Substitute**
2 x 3/2 NC *3)	A
2 x 3/2 NO *3)	B
2 x 3/2 NO/NC *3)	C
2 x 2/2 NC *3)	E
2 x 2/2 NO *3)	F
2 x 2/2 NO/NC *3)	G
5/2	5
5/3 APB	6
5/3 COE	7

*3) Available with softseal spool only (VS18S).

Application	Substitute
Standard environment	A
ATEX approval *6)	E
Voltage	**Substitute**
24 V d.c 1,2 W (±10%)	13
115 V a.c 1,5 VA (-10/+15%)	18
12 V d.c. 1,2 W (±10%)	on request
12 V d.c. 1,5 W (-17/+20%)	on request
24 V d.c 1,5 W (-17/+20%)	on request
Manual override *5)	**Substitute**
Push & turn	2
Push only	3
Extended, Push only	5
Actuation/Pilot supply	**Substitute**
Solenoid/Spring Internal pilot supply	17
Solenoid/Spring External pilot supply	27
Solenoid/Solenoid Internal pilot supply	11
Solenoid/Solenoid External pilot supply	22
Solenoid priority side 14/Solenoid (5/2 only) Internal pilot supply *4)	91
Solenoid priority side 14/Solenoid (5/2 only) External pilot supply *4)	92

*4) Available with glandless spool & sleeve only (VS18G)

*5) Option "without manual override" available on request.

*6) Available with 24 V d.c. 1,2 W (±10%) only

Our policy is one of continued research and development. We therefore reserve the right to amend, without notice, the specifications given in this document. (2005 - 5003g) © 2020 IMI International s.r.o.

Electrical details for solenoid operators

Voltage tolerances	(24 V d.c) +/- 10%
Voltage tolerances	(115 V a.c) -10%/+15%
Rating	100 % Continuous duty
Inlet orifice	0,8 mm
Indication	LED green
Surge surpression	Transil diode
Materials	PPS (body), FKM and NBR (seal)

Note: Alternative voltage and voltage tolerances see option selector on page 6

Protection classification (IP Code):
All VS18 valve islands fulfill IP65 and NEMA4 ratings.
Power supply and precautions:
All VS18 24 V d.c products are designed to be used with a protective extra low voltage (PELV) power supply. All VS18 115 V a.c products correspond to the protection class I. Connection of the protective earth (PE) ground is required.
UL approval:
Recognized to UL 429 for Electrically Operated Valves
(not applicable for Industrial Ethernet, IO-Link and Fieldbus options).

ATEX:
The 24 V d.c valve islands fulfils the requirement of the standard 2014/34/EU for intended use in hazardous locations.

Multipole and Industrial Ethernet versions:
II 3G Ex nA IIC T4 Gc
II 3D Ex tc IIIC T135°C Dc

IO-Link
II 3G Ex ec IIC T4 Gc
II 3D Ex tc IIIB T135°C Dc

Fieldbus versions:
II 3G Ex nA IIC T4 Gc
II 3D Ex tc IIIB T135°C Dc

Equipment group, category, type of protection:
The Declaration of Conformity of the valve islands was conducted by IMI Precision Engineering Norgren GmbH, D-70731 Fellbach. Please review all ATEX data and notes in the maintenance and instruction booklet to eliminate any risks, allowing for safe function of the valve islands.
Note:
Please refer to the corresponding ATEX installation instructions and the maximum permissible operating conditions for valve islands in the ATEX zone.
The maximum allowed power consumption for ATEX is 20W. This corresponds to 16 simultaneously energized pilot valves. If a configuration consists of more than 16 pilot valves the user must undertake external actions (e.g. power-limited power supplies) to make sure that the power consumption of 20W is not exceeded.
This does not apply to IO-Link versions. Up to 40 pilot valves can be operated at IO-Link versions.

Accessories
Electrical Connection and base accessories for Multipole, Fieldbus, IO-Link and Industrial Ethernet

Spare valve identification labels *7)

VS2672905-KG00 (10 pcs.)

Blanking plug for base connector hole *8)

VS2672914-KG00

Blanking disc to modular sub-base

VS1872405-KF00 (Ports 1, 3, 5)
VS1872406-KF00 (Port 12/14)

Manual override set-up kit

VS2672906-KG00

DIN EN 50 022 rail (1 m)

V10009-C00 (35 x 7,5 mm)

DIN-rail mounting kit

V70531-KA0 ***9)**
VS2672971-KG00 ***11)**

Intermediate supply/ exhaust module

Page 18
VS1872402-AF00 (G1/8)
VS1872402-PF00 (NPTF 1/8)

Blanking plate

Page 18
VS1872404-KF00 ***10)**
VS1872407-KF00 ***12)**

*7) When purchasing assembled valve islands from IMI Norgren, valve identification labels are already included.
*8) When V44/V45 valves are fitted on VS26 bases.
*9) Not suitable for Industrial Ethernet.
*10) Not suitable for IO-Link and Industrial Ethernet.
*11) Industrial Ethernet (only)
*12) IO-Link and Industrial Ethernet (only)

Our policy is one of continued research and development. We therefore reserve the right to amend, without notice, the specifications given in this document. (2005 - 5003g) © 2020 IMI International s.r.o.

Sandwich plates

Single pressure regulator plate

Page 13

VS1872400-KF10 (Port 1)
VS1872400-KF20 (Port 2)
VS1872400-KF30 (Port 4)

Double pressure regulator plate

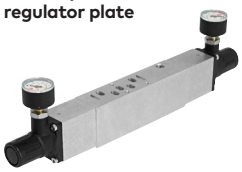

Page 13

VS1872400-KF40 (Ports 2+4)

Flow regulator plate

Page 14

VS1872401-KF00 (Ports 3+5)

Sandwich plate with additional pressure port 1

Page 14

VS1872428-KFG00 (G1/8)

Single valve shut-off plate

Page 15

VS1872403-KF00 (Port 1)

Sub-bases and end plates

Single station sub-base

Page 9

Double station modular sub-base

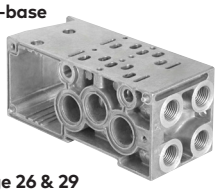

Page 26 & 29

Single station modular sub-base

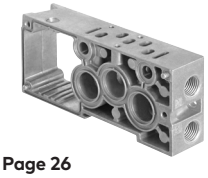

Page 26

End plate kit

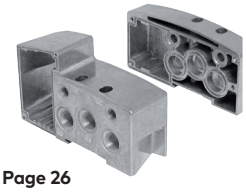

Page 26

Valve dimensions

VS18*5*7DF*1**
5/2 Single solenoid pilot valve, mechanical spring return

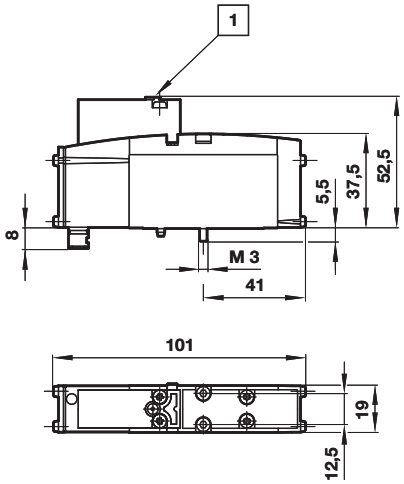

VS18**DF*1****
2 x 2/2, 2 x 3/2, 5/2 and 5/3 Double solenoid, pilot valve

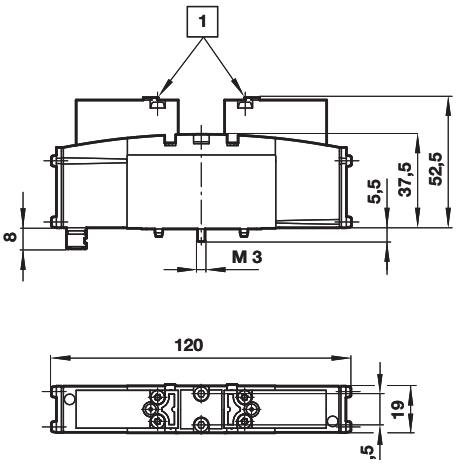

Dimensions in mm
Projection/First angle

1 Manual override

Our policy is one of continued research and development. We therefore reserve the right to amend, without notice, the specifications given in this document. (2005 - 5003g) © 2020 IMI International s.r.o.

Single station sub-base

Description	Ports 1, 3 & 5	Ports 12/14 & 82/84	Ports 2 & 4	Connector type	Model
Single station sub-base for 24 V d.c.	G1/8	G1/8	G1/8	M12	VS1872010-AF00
Single station sub-base for 24 V d.c.	NPTF 1/8	NPTF 1/8	NPTF 1/8	M12	VS1872010-PF00
Single station sub-base for 24 V d.c. and 115 V a.c.	NPTF 1/8	NPTF 1/8	NPTF 1/8	NPTF1/2 conduit	VS1872011-PF00

Connector type: NPTF 1/2 conduit with flying leads

Dimensions in mm
Projection/First angle

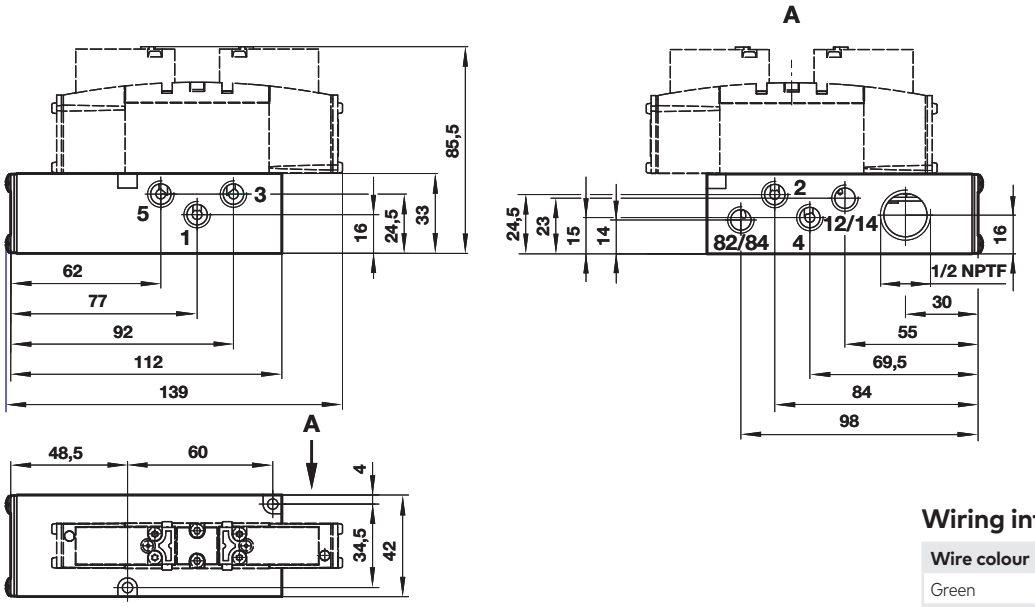

Wiring information

Wire colour	Function
Green	Earth
Yellow	Signal for solenoid 12
Black	Common for solenoid 12 and 14
Red	Signal for solenoid 14

Connector type: M12

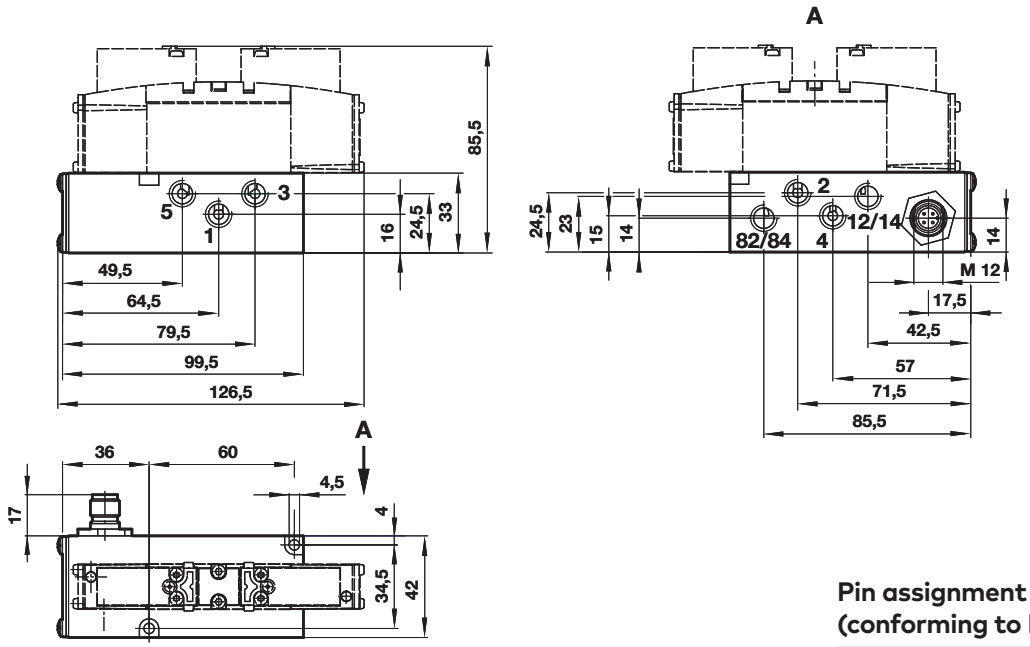

Pin assignment (conforming to DIN ISO 20401)

Male	Pin no.	Function
	1	Not used
	2	Signal for solenoid 12
	3	Common for solenoid 12 and 14
	4	Signal for solenoid 14

Our policy is one of continued research and development. We therefore reserve the right to amend, without notice, the specifications given in this document. (2005 - 5003g) © 2020 IMI International s.r.o.

Valve island dimensions - Multipole and Fieldbus

See page 25 and 26 for sub-base and end plate kit ordering information

Dimensions in mm
Projection/First angle

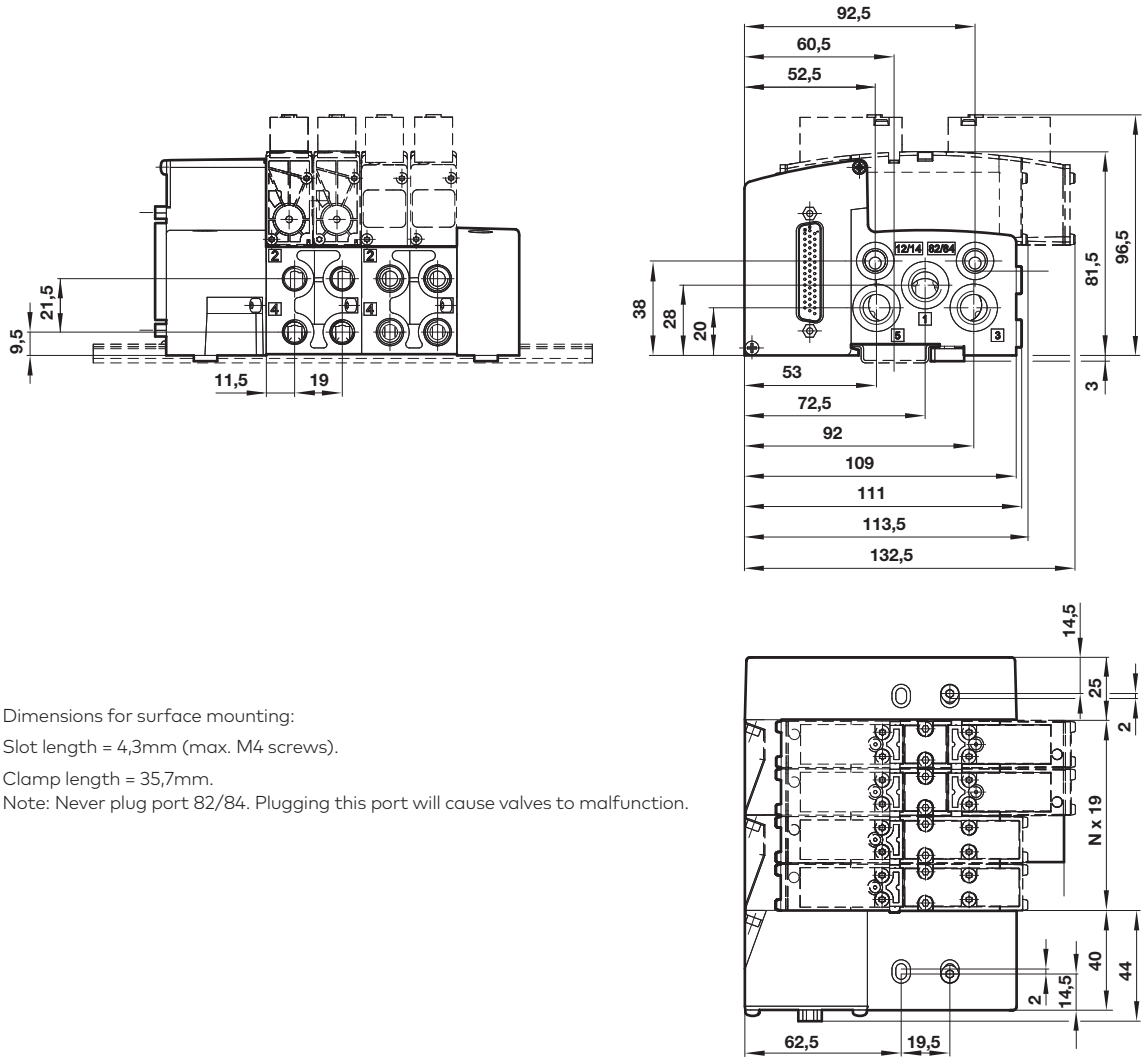

Dimensions for surface mounting:

Slot length = 4,3mm (max. M4 screws).

Clamp length = 35,7mm.

Note: Never plug port 82/84. Plugging this port will cause valves to malfunction.

N Number of stations

Electrical connection	Min. no. of valve stations	Max. no. of valve stations	For details see page
Multipole	2	20	17
Fieldbus protocols	4	16	20

Our policy is one of continued research and development. We therefore reserve the right to amend, without notice, the specifications given in this document. (2005 - 5003g) © 2020 IMI International s.r.o.

Valve island dimensions - Industrial Ethernet

See page 29 for sub-base and end plate kit ordering information

Dimensions in mm
Projection/First angle

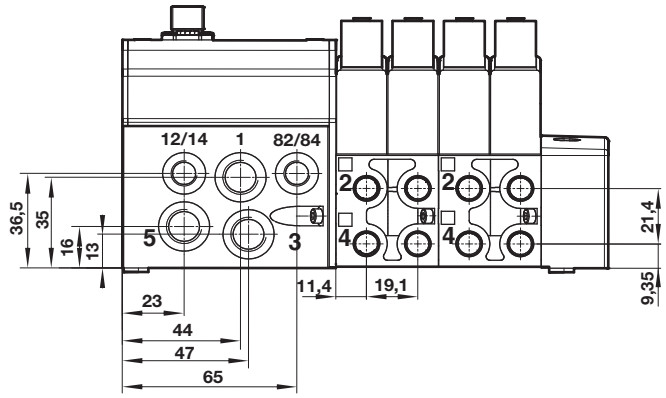

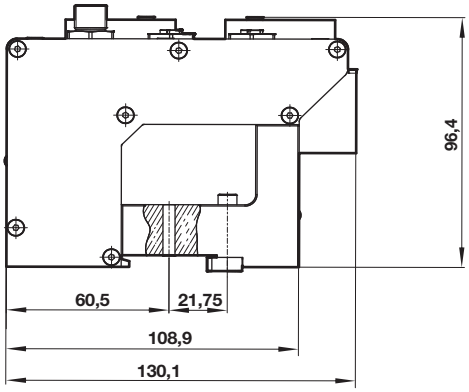

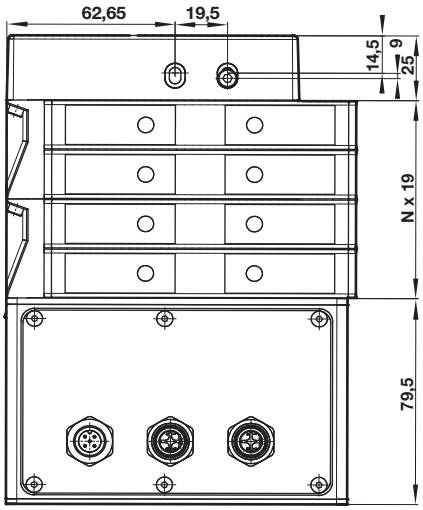

N Number of stations

Electrical connection	Min. no. of valve stations	Max. no. of valve stations	For details see page
Industrial Ethernet protocols	4	20	21 and 22

Our policy is one of continued research and development. We therefore reserve the right to amend, without notice, the specifications given in this document. (2005 - 5003g) © 2020 IMI International s.r.o.

Valve island dimensions - IO-Link

See page 29 for sub-base and end plate kit ordering information

Abmessungen in mm
Projection / First angle

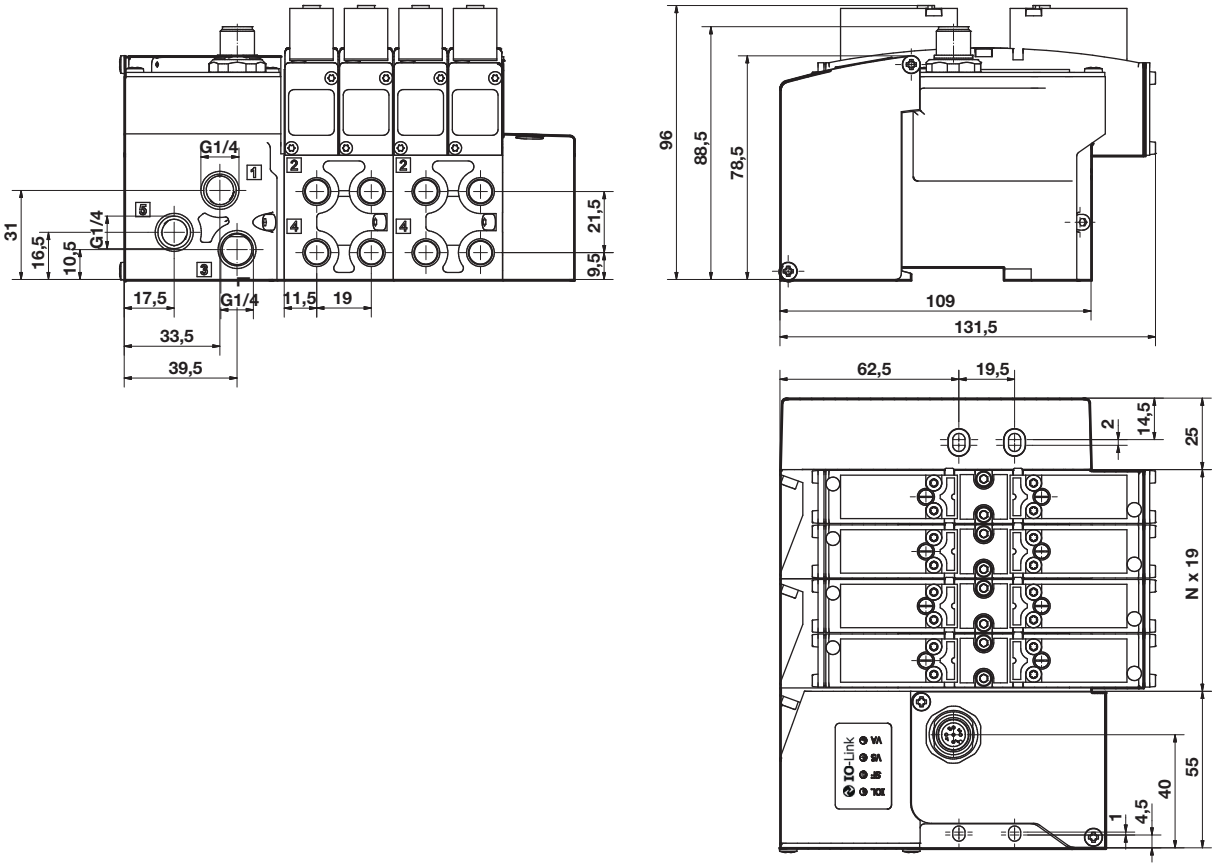

N Number of stations

Electrical connection	Min. no. of valve stations	Max. no. of valve stations	For details see page
IO-Link	2	20	23

Our policy is one of continued research and development. We therefore reserve the right to amend, without notice, the specifications given in this document. (2005 - 5003g) © 2020 IMI International s.r.o.

Sandwich plates
Pressure regulator sandwich plates

Symbol	Model	Description
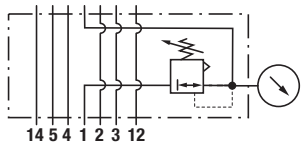	VS1872400-KF10	Regulation of port 1, regulator on side 12
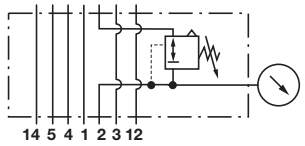	VS1872400-KF20	Regulation of port 2, regulator on side 12

Symbol	Model	Description
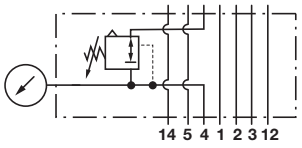	VS1872400-KF30	Regulation of port 4, regulator on side 14
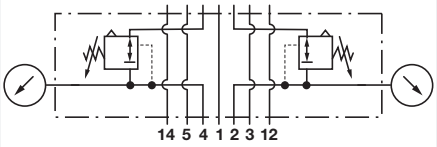	VS1872400-KF40	Regulation of ports 2+4

Dimensions in mm
Projection/First angle

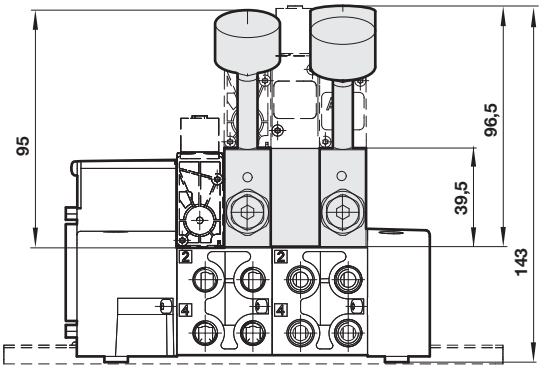

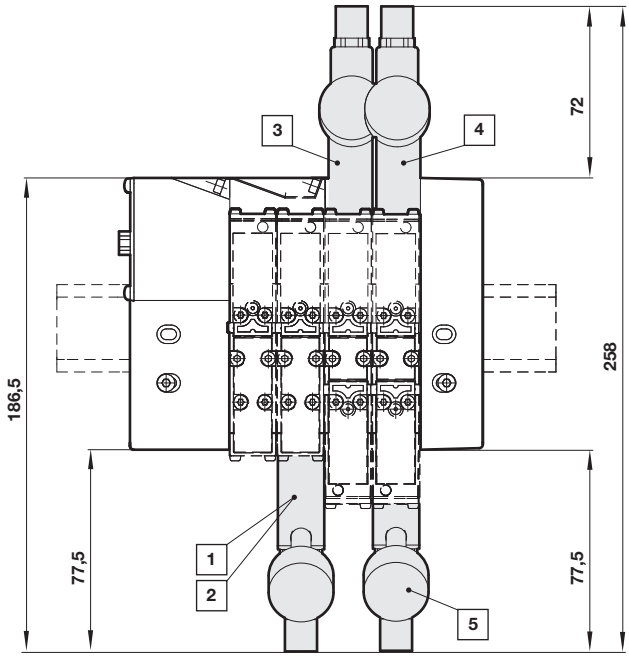

Flow characteristics for pressure regulator plates

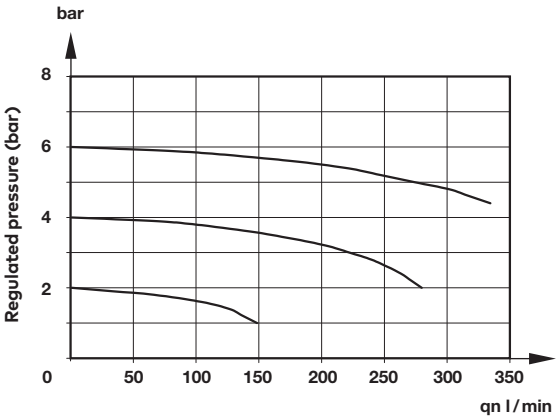

1 Regulation of port 1
2 Regulation of port 2
3 Regulation of port 4
4 Regulation of port 2+4
5 Gauge

Spare part number for gauge: V70534-500

Our policy is one of continued research and development. We therefore reserve the right to amend, without notice, the specifications given in this document. (2005 - 5003g) © 2020 IMI International s.r.o.

Sandwich plates
Flow regulator & additional pressure

Symbol	Model	Description
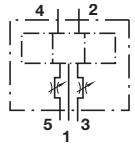	VS1872401-KF00	Flow regulator supplied with gasket, dual regulation of exhaust ports 3 and 5

Symbol	Model	Description
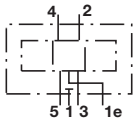	VS1872428-KF00	Sandwich plate with additional pressure port 1 (G1/8), supplied with gasket
	VS1872429-KF00	Sandwich plate with additional pressure port 1 (NPTF 1/8), supplied with gasket

Dimensions in mm
Projection/First angle

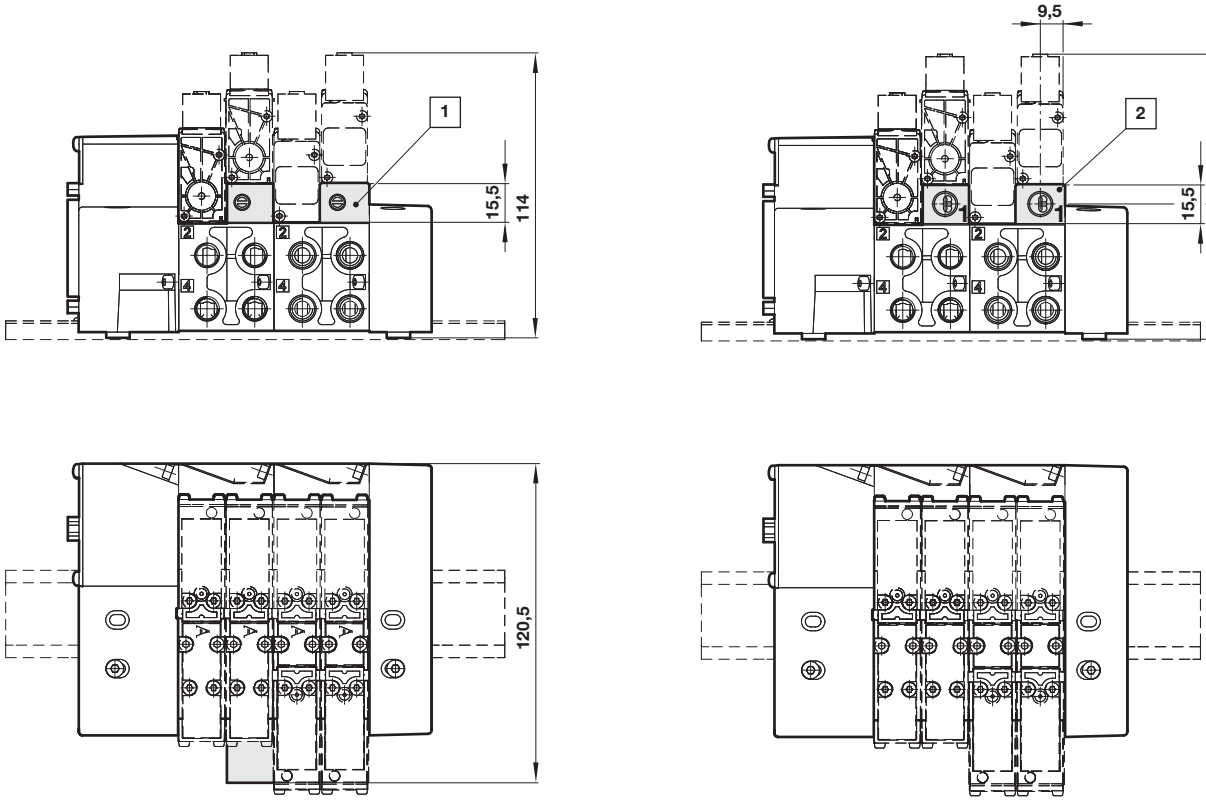

1 Flow regulator plate
2 Sandwich plate with additional pressure port 1

Flow characteristics
Dual regulation of exhaust ports 3 and 5

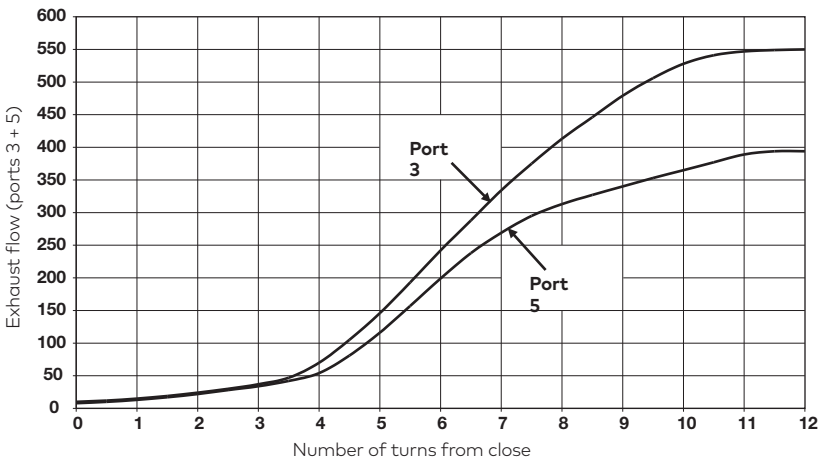

Flow: Port 1>2 and 1>4: remains unchanged.

Flow measured at 6 bar inlet, pressure drop 1 bar

Our policy is one of continued research and development. We therefore reserve the right to amend, without notice, the specifications given in this document. (2005 - 5003g) © 2020 IMI International s.r.o.

Sandwich plates–Single valve shut-off plate

Symbol	Model	Description
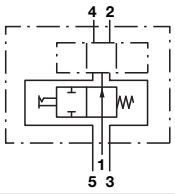	VS1872403-KF00	Single valve shut-off plate supplied with gasket

Allows individual exchange of valve while valve island is pressurised by port 1 - enabling unbroken production in a continuously operating process.
Flow restricted to max. 240 l/min.

Base accessories

Model	Description
VS1872402-AF00	Intermediate supply/exhaust module, port size G1/8 *9)
VS1872402-PF00	Intermediate supply/exhaust module, port size NPTF 1/8 *9)
VS1872404-KF00	Blanking plate for blocking of unused stations (supplied with gasket)

*9) for use see page 16

Dimensions in mm
Projection/First angle

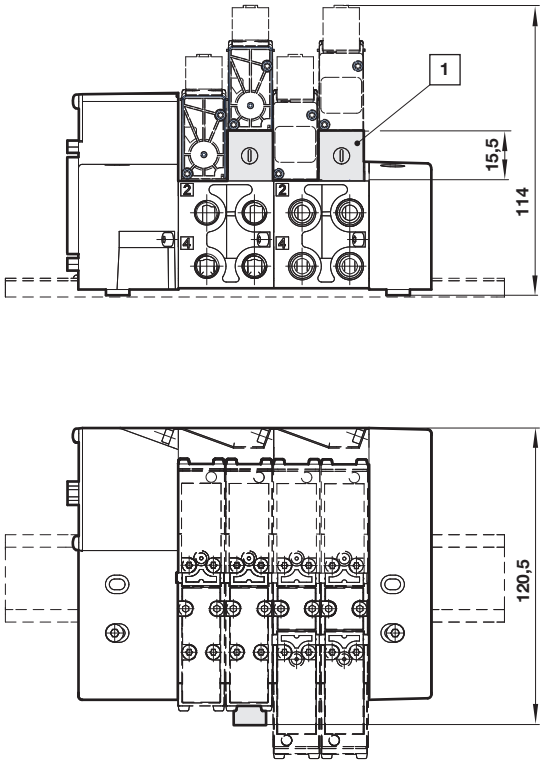

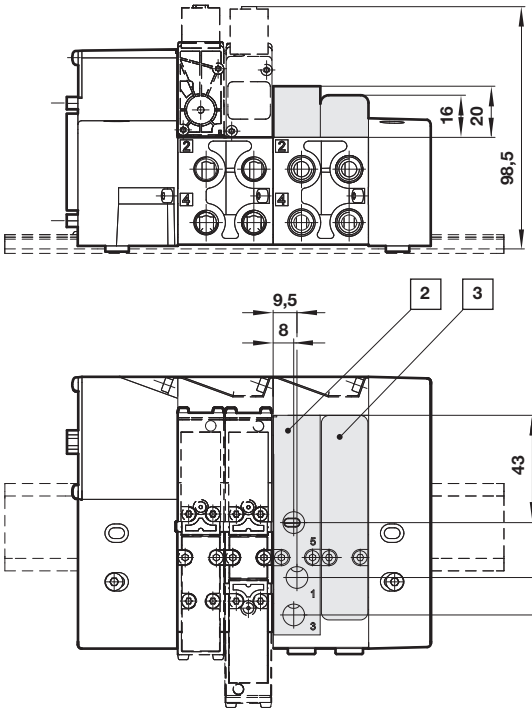

1 Single valve shut-off plate
2 Intermediate supply/exhaust module
3 Blanking plate

Our policy is one of continued research and development. We therefore reserve the right to amend, without notice, the specifications given in this document. (2005 - 5003g) © 2020 IMI International s.r.o.

Multi pressure configurations

A

Blanking disc	Type
VS1872405-KF00	Suitable for ports 1, 3 and/or 5

B

Intermediate supply/exhaust module	Type
VS1872402-AF00	G1/8
VS1872402-PF00	NPTF 1/8

Dual pressure

Dimensions in mm
Projection/First angle

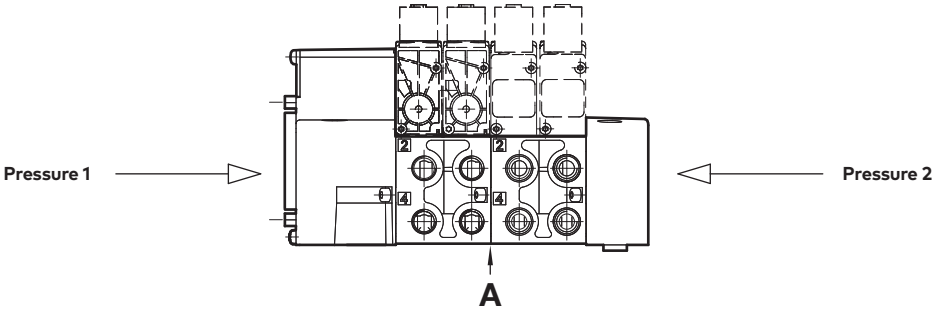

Multi pressure

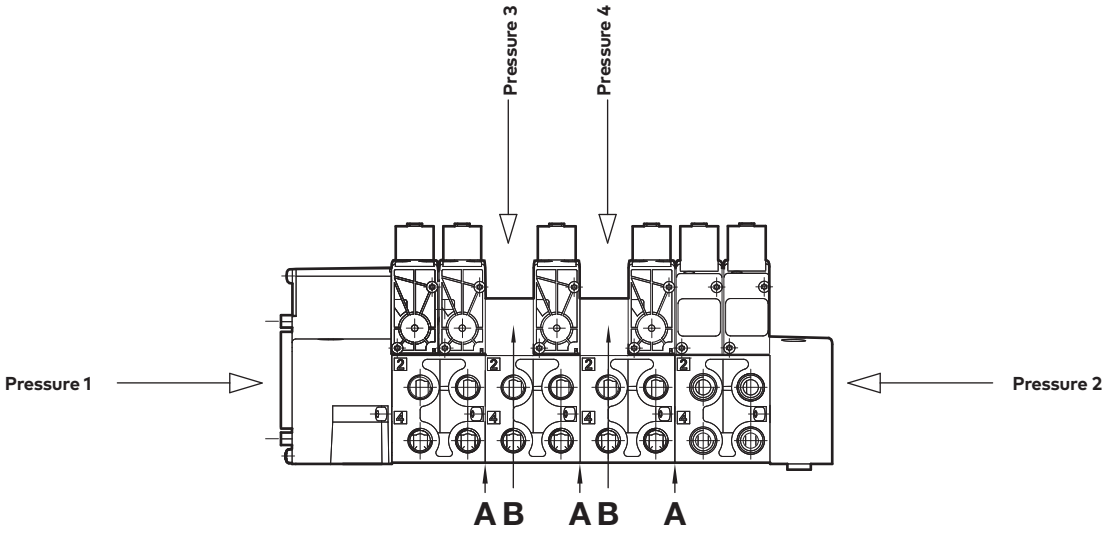

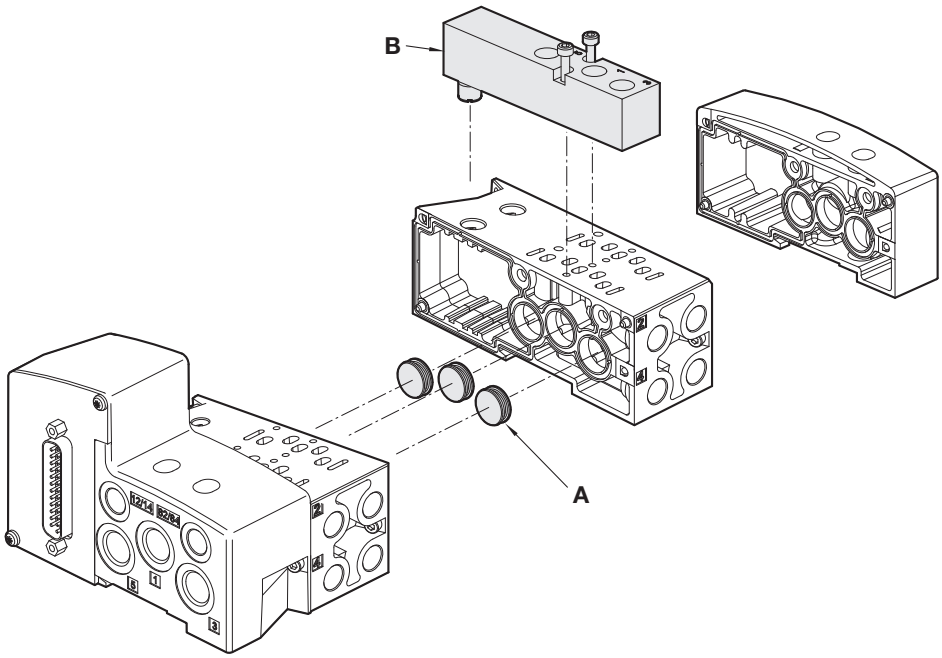

Our policy is one of continued research and development. We therefore reserve the right to amend, without notice, the specifications given in this document. (2005 - 5003g) © 2020 IMI International s.r.o.

Multipole options

Connector type	Voltage	No. of stations	Max. no. solenoids
D-Sub 9-pin	24 V d.c.	02/03/04	8
D-Sub 15-pin	24 V d.c.	02/03/04/05/06/07	14
D-Sub 25-pin	24 V d.c.	02/03/04/05/06/07/08/09/10/11/12	24
D-Sub 44-pin	24 V d.c.	08/09/10/11/12/13/14/15/16/17/18/19/20	40
M23 19-pin	115 V a.c., 24 V d.c.	02/03/04/05/06/07/08	16
NPTF1 Conduit entry with terminals	115 V a.c., 24 V d.c.	02/03/04/05/06/07/08/09/10/11/12	24

For valve islands with 17 ... 20 valve stations, please contact our customer service. For details of single parts see pages 26 to 29.

Dimensions in mm
Projection/First angle

D-Sub 9-pin

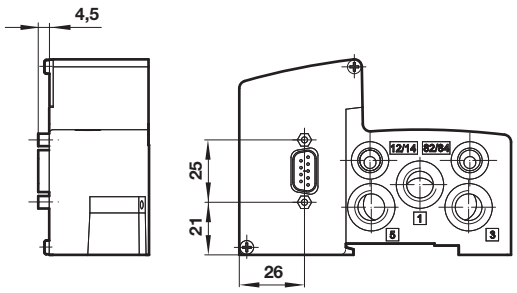

D-Sub 15-pin

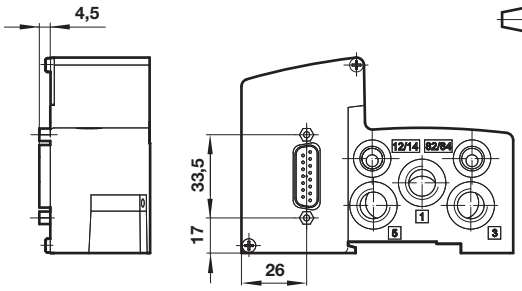

D-Sub 25- / 44 -pin

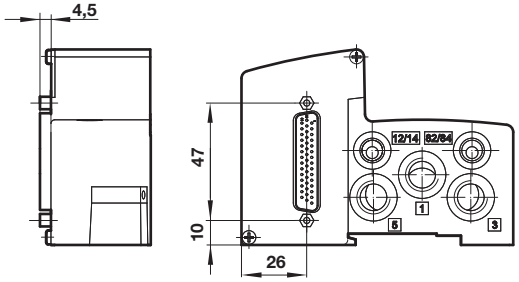

M23 19-pin

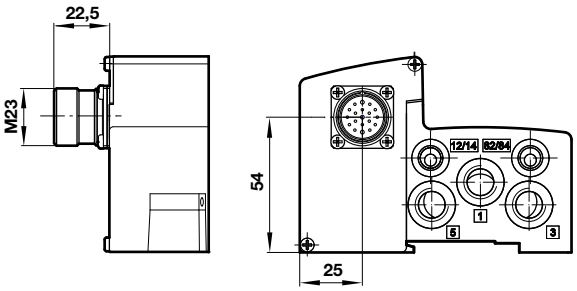

NPTF1 Conduit entry with terminals

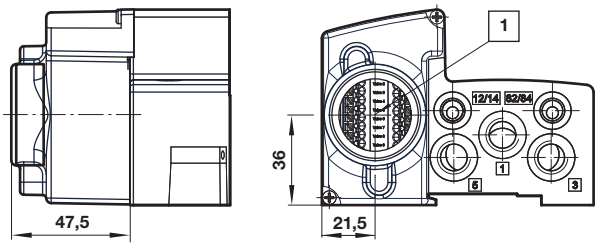

1 Maximum wire size AWG18

Our policy is one of continued research and development. We therefore reserve the right to amend, without notice, the specifications given in this document. (2005 - 5003g) © 2020 IMI International s.r.o.

Multipole accessories

Cable length	D-Sub connector 9-pin IP65	D-Sub connector 15-pin IP65	D-Sub connector 25-pin IP65	D-Sub connector 44-pin IP65	M23 connector 19-pin IP65
1 m	VS2672910-KG00	VS2672915-KG00	V11569-E01	V11570-E01	VS2672943-KG00
3 m	VS2672911-KG00	VS2672916-KG00	V11569-E03	V11570-E03	VS2672944-KG00
5 m	VS2672912-KG00	VS2672917-KG00	V11569-E05	V11570-E05	VS2672945-KG00

For cable length longer than 5 m please contact customer service.

D-Sub connector 9-pin *11)

Pin no.	Wire colour	Socket	Pilot	Station
1	White	Solenoid 1-a	14	1
2	Brown	Solenoid 2-a	14	2
3	Green	Solenoid 3-a	14	3
4	Yellow	Solenoid 4-a	14	4
5	Grey	Solenoid 1-b	12	1
6	Pink	Solenoid 2-b	12	2
7	Blue	Solenoid 3-b	12	3
8	Red	Solenoid 4-b	12	4
9	Black	Common	–	–

D-Sub connector 15-pin *11)

Pin no.	Wire colour	Socket	Pilot	Station
1	White	Solenoid 1-a	14	1
2	Brown	Solenoid 2-a	14	2
3	Green	Solenoid 3-a	14	3
4	Yellow	Solenoid 4-a	14	4
5	Grey	Solenoid 5-a	14	5
6	Pink	Solenoid 6-a	14	6
7	Blue	Solenoid 7-a	14	7
8	Red	Solenoid 1-b	12	1
9	Black	Solenoid 2-b	12	2
10	Violet	Solenoid 3-b	12	3
11	Grey/Pink	Solenoid 4-b	12	4
12	Red/Blue	Solenoid 5-b	12	5
13	White/Green	Solenoid 6-b	12	6
14	Brown/Green	Solenoid 7-b	12	7
15	White/Yellow	Common	–	–

*11) According to IEC60757

D-Sub connector 25-pin *11)

Pin no.	Wire colour	Socket		Pilot	Station
1	White	Solenoid	1-a	14	1
2	Brown	Solenoid	2-a	14	2
3	Green	Solenoid	3-a	14	3
4	Yellow	Solenoid	4-a	14	4
5	Grey	Solenoid	5-a	14	5
6	Pink	Solenoid	6-a	14	6
7	Blue	Solenoid	7-a	14	7
8	Red	Solenoid	8-a	14	8
9	Black	Solenoid	9-a	14	9
10	Violet	Solenoid	10-a	14	10
11	Grey/Pink	Solenoid	11-a	14	11
12	Red/Blue	Solenoid	12-a	14	12
13	White/Green	Common		-	-
14	Brown/Green	Solenoid	1-b	12	1
15	White/Yellow	Solenoid	2-b	12	2
16	Yellow/Brown	Solenoid	3-b	12	3
17	White/Grey	Solenoid	4-b	12	4
18	Grey/Brown	Solenoid	5-b	12	5
19	White/Pink	Solenoid	6-b	12	6
20	Pink/Brown	Solenoid	7-b	12	7
21	White/Blue	Solenoid	8-b	12	8
22	Brown/Blue	Solenoid	9-b	12	9
23	White/Red	Solenoid	10-b	12	10
24	Brown/Red	Solenoid	11-b	12	11
25	White/Black	Solenoid	12-b	12	12

Our policy is one of continued research and development. We therefore reserve the right to amend, without notice, the specifications given in this document. (2005 - 5003g) © 2020 IMI International s.r.o.

D-Sub connector 44-pin *11)

Pin no.	Wire colour	Socket	Pilot	Station
1	White	Solenoid 1–a	14	1
2	Brown	Solenoid 2–a	14	2
3	Green	Solenoid 3–a	14	3
4	Yellow	Solenoid 4–a	14	4
5	Grey	Solenoid 5–a	14	5
6	Pink	Solenoid 6–a	14	6
7	Blue	Solenoid 7–a	14	7
8	Red	Solenoid 8–a	14	8
9	Black	Solenoid 9–a	14	9
10	Violet	Solenoid 10–a	14	10
11	Grey/Pink	Solenoid 11–a	14	11
12	Red/Blue	Solenoid 12–a	14	12
13	White/Green	Solenoid 13–a	14	13
14	Brown/Green	Solenoid 14–a	14	14
15	White/Yellow	Solenoid 15–a	14	15
16	Yellow/Brown	Solenoid 1–b	12	1
17	White/Grey	Solenoid 2–b	12	2
18	Grey/Brown	Solenoid 3–b	12	3
19	White/Pink	Solenoid 4–b	12	4
20	Pink/Brown	Solenoid 5–b	12	5
21	White/Blue	Solenoid 6–b	12	6
22	Brown/Blue	Solenoid 7–b	12	7
23	White/Red	Solenoid 8–b	12	8
24	Brown/Red	Solenoid 9–b	12	9
25	White/Black	Solenoid 10–b	12	10
26	Brown/Black	Solenoid 11–b	12	11
27	Grey/Green	Solenoid 12–b	12	12
28	Yellow/Grey	Solenoid 13–b	12	13
29	Pink/Green	Solenoid 14–b	12	14
30	Yellow/Pink	Solenoid 15–b	12	15
31	Green/Blue	Solenoid 16–a	14	16
32	Yellow/Blue	Solenoid 16–b	12	16
33	–	Not used	–	–
34	–	Not used	–	–
35	–	Not used	–	–
36	–	Not used	–	–
37	–	Not used	–	–
38	–	Not used	–	–
39	–	Not used	–	–
40	–	Not used	–	–
41	–	Not used	–	–
42	–	Not used	–	–
43	Blue/Black *12)	Common	–	–
44	Red/Black *12)	Common	–	–

*11) According to IEC60757

*12) The IMI Norgren D-Sub 44-pin cables (see part numbers on page 18) do not have 44 wires, but only 34 wires. Therefore, the wires associated with pins 1 through 32 are according to IEC60757, wires 43 and 44 differ from the standard and are coloured in green/black and yellow/black.

M23 connector 19-pin

Pin no.	Wire colour	Socket	Pilot	Station
1	White	Solenoid 8-a	14	8
2	Green/Brown	Solenoid 6-a	14	6
3	Green	Solenoid 4-a	14	4
4	Yellow	Solenoid 2-b	12	2
5	Grey	Solenoid 2-a	14	2
6	Blue(thick)	Common	–	–
7	White/Grey	Solenoid 1-b	12	1
8	Red	Solenoid 3-b	12	3
9	Black	Solenoid 5-b	12	5
10	Violet	Solenoid 7-b	12	7
11	Grey/Pink	Solenoid 7-a	14	7
12	Yellow/Green	Earth	–	–
13	White/Green	Solenoid 6-b	12	6
14	Brown/Green	Solenoid 4-b	12	4
15	White/Yellow	Solenoid 1-a	14	1
16	Yellow/Brown	Solenoid 3-a	14	3
17	Pink	Solenoid 5-a	14	5
18	Red/Blue	Solenoid 8-b	12	8
19	Brown(thick)	Not used	–	–

NPTF1 Conduit entry with terminals *13)

Pin no.	Socket	Pilot	Station
C1	Solenoid 1-a	14	1
C2	Solenoid 2-a	14	2
C3	Solenoid 3-a	14	3
C4	Solenoid 4-a	14	4
C5	Solenoid 5-a	14	5
C6	Solenoid 6-a	14	6
C7	Solenoid 7-a	14	7
C8	Solenoid 8-a	14	8
C9	Solenoid 9-a	14	9
C10	Solenoid 10-a	14	10
C11	Solenoid 11-a	14	11
C12	Solenoid 12-a	14	12
C13	Solenoid 1-b	12	1
C14	Solenoid 2-b	12	2
C15	Solenoid 3-b	12	3
C16	Solenoid 4-b	12	4
C17	Solenoid 5-b	12	5
C18	Solenoid 6-b	12	6
C19	Solenoid 7-b	12	7
C20	Solenoid 8-b	12	8
C21	Solenoid 9-b	12	9
C22	Solenoid 10-b	12	10
C23	Solenoid 11-b	12	11
C24	Solenoid 12-b	12	12
C25	Common	–	–
C26	Common	–	–
C27	Earth	–	–
C28	Earth	–	–

*13) Max.wire size AWG18

Our policy is one of continued research and development. We therefore reserve the right to amend, without notice, the specifications given in this document. (2005 - 5003g) © 2020 IMI International s.r.o.

Fieldbus, IO-Link and Industrial Ethernet options: Overview

Protocol	Communications Connector	Power connector	No. of stations	Max. no. solenoids
PROFIBUS DP	1 x D-Sub; 9-pin	M12; 4-pin	04/05/06/07/08/09/10/11/12/13/14/15/16	32
	2 x M12; 5-pin	M12; 4-pin	04/05/06/07/08/09/10/11/12/13/14/15/16	32
	2 x M12; 5-pin	7/8; 5-pin	04/05/06/07/08/09/10/11/12/13/14/15/16	32
PROFINET IRT	2 x M12; 4-pin	M12; 5-pin	04/06/08/10/12/14/16/18/20	40
DeviceNet	1 x M12; 5-pin	M12; 4-pin	04/05/06/07/08/09/10/11/12/13/14/15/16	32
EtherNet/IP	2 x M12; 4-pin	M12; 5-pin	04/06/08/10/12/14/16/18/20	40
CANopen	1 x M12; 5-pin	M12; 4-pin	04/05/06/07/08/09/10/11/12/13/14/15/16	32
IO-Link	1 x M12; 5-pin	over comm. connector	02/04/06/08/10/12/14/16/18/20	40

For parts and assembly instructions of Fieldbus and Industrial Ethernet components, consult our technical service.

Fieldbus protocol: PROFIBUS DP
Connector: 1 x D-Sub 9-pin / 1 x M12 4-pin

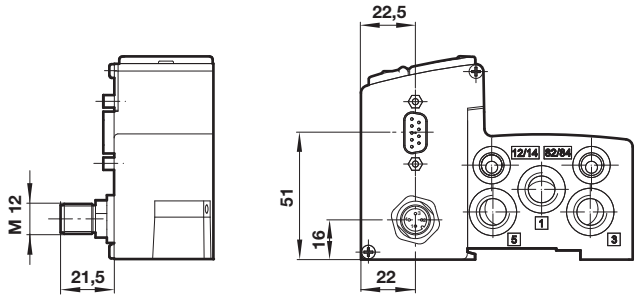

Bus connector: D-Sub 9-pin

Female Bus in/out	Pin no.	Function
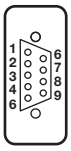	1	Shield
	2	N/C
	3	B-line (red) RxD / TxD-P
	4	N/C
	5	DGND (OVI) isolated
	6	VP (5VI) isolated
	7	N/C
	8	A-line (green) RxD / TxD-N N/C
	9	N/C

Power connector: M12 4-pin A-coded

Male	Pin no.	Function	Tolerance	Max. current
	1	24 VB logic circuit supply	±25%	300 mA
	2	24 VA valves	±10%	*14)
	3	0 V	–	*15)
	4	Earth	–	–

Fieldbus protocol: PROFIBUS DP
Connector: 2 x M12 5-pin / 1 x M12 4-pin

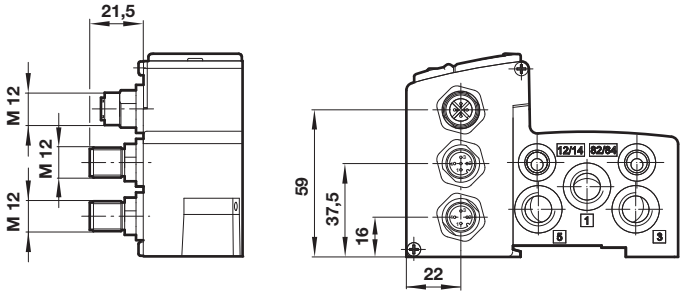

Bus connector: M12 5-pin B-coded

Male Bus in	Female Bus out	Pin no.	Function
		1	5 VI Opto isolator
		2	A-line (green)
		3	0 VI Opto isolated
		4	B-line (red)
		5	Shield
		Threaded joint	Shield

Power connector: M12 4-pin A-coded

Male	Pin no.	Function	Tolerance	Max. current
	1	24 VB logic circuit supply	±25%	300 mA
	2	24 VA valves	±10%	*14)
	3	0 V	–	*15)
	4	Earth	–	–

*14) Imax = 10 mA + n*60 mA
n = number of energized solenoids

*15) Imax = IVA + IVB

Our policy is one of continued research and development. We therefore reserve the right to amend, without notice, the specifications given in this document. (2005 - 5003g) © 2020 IMI International s.r.o.

Fieldbus protocol: PROFIBUS DP
Connector: 2 x M12 5-pin / 1 x 7/8 5-pin

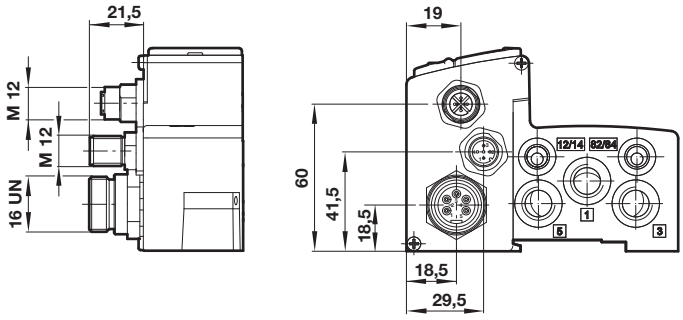

Bus connector: M12 5-pin B-coded

Male Bus in	Female Bus out	Pin no.	Function
		1	5VI isolated
		2	A-line (green)
		3	OVI isolated
		4	B-line (red)
		5	Shield
		Threaded joint	Shield

Power connector: 7/8 5-pin

Male	Pin no.	Function	Tolerance	Max. current
	1	–	–	–
	2	0 V	–	*17)
	3	Earth	–	–
	4	24 VA valves	±10%	*16)
	5	24 VB logic circuit supply	±25%	300 mA

Industrial Ethernet protocol: PROFINET IRT
Connector: 2 x M12 4-pin / 1 x M12 5-pin

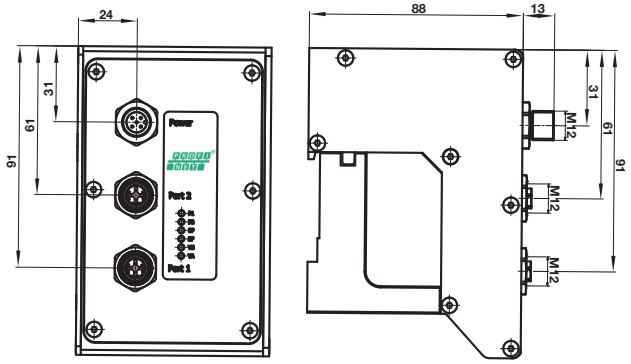

Bus connector: M12 4-pin D-coded

Female	Pin no.	Function
	1	Transmission data + (TD +)
	2	Receive data + (RD+)
	3	Transmission data - (TD-)
	4	Receive data - (RD-)
	Housing	FE (functional earth)

Power connector: M12 5-pin A-coded

Male	Pin no.	Function	Tolerance	Max. current
	1	L1 (VB+) 24 V electronics power supply	30%	max. 250 mA
	2	N2 (VA-) 0V valves power supply	–	–
	3	N1 (VB-) 0V electronics power supply	–	–
	4	L2 (VA+) 24 V valves power supply	10%	max. 25 mA + 70 mA x n
	5	FE (functional earth)		

(n = number of switched valves)

Fieldbus protocol: DeviceNet
Connector: 1 x M12 5-pin / 1 x M12 4-pin

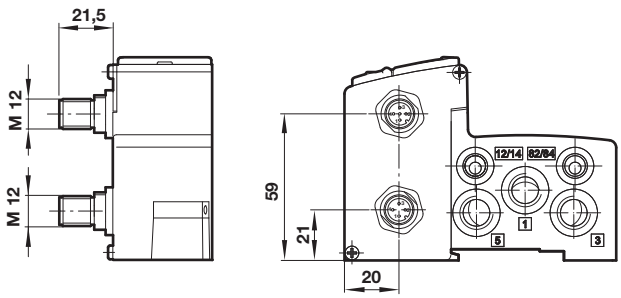

Bus connector: M12 5-pin A-coded

Male Bus in/out	Pin no.	Function	Tolerance	Max. current
	1	Drain	–	–
	2	V+ 24 V *22)	±25%	200mA
	3	V- 0 V *22)	–	–
	4	CAN_H	–	–
	5	CAN_L	–	–

Power connector: M12 4-pin A-coded

Male	Pin no.	Function	Tolerance	Max. current
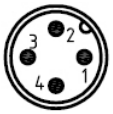	1	-	-	-
	2	24 VA valves	±10%	*20)
	3	0 V	–	*21)
	4	Earth	–	–

Our policy is one of continued research and development. We therefore reserve the right to amend, without notice, the specifications given in this document. (2005 - 5003g) © 2020 IMI International s.r.o.

Industrial Ethernet protocol: EtherNet/IP
Connector: 2 x M12 4-pin / 1 x M12 5-pin

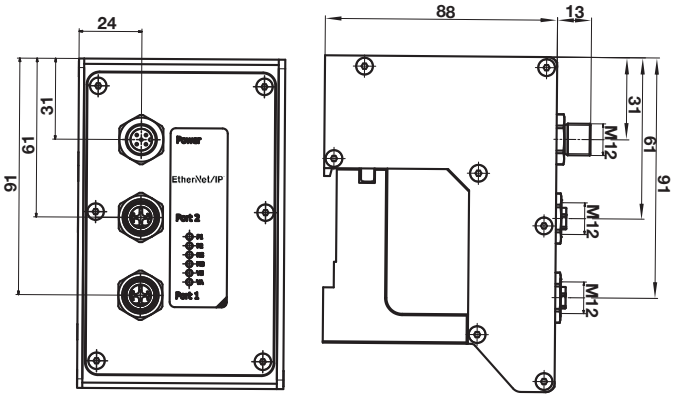

Bus connector: M12 4-pin D-coded

Female	Pin no.	Function
	1	Transmission data + (TD +)
	2	Receive data + (RD+)
	3	Transmission data - (TD-)
	4	Receive data - (RD-)
	Housing	FE (functional earth)

Power connector: M12 5-pin A-coded

Male	Pin no.	Function	Tolerance	Max. current
	1	L1 (VB+) 24 V electronics power supply	30%	max. 250 mA
	2	N2 (VA-) 0V valves power supply	–	–
	3	N1 (VB-) 0V electronics power supply	–	–
	4	L2 (VA+) 24 V valves power supply	10%	max. 25 mA + 70 mA x n
	5	FE (functional earth)		

(n = number of switched valves)

Fieldbus protocol: CANopen
Connector: 1 x M12 5-pin / 1 x M12 4-pin

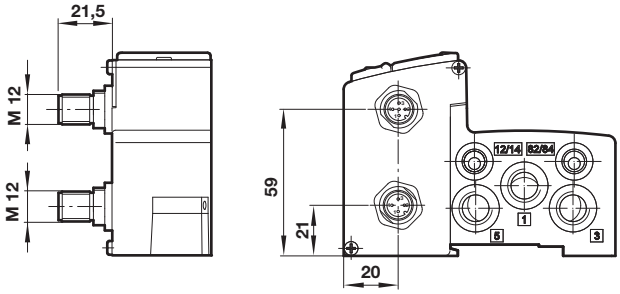

Bus connector: M12 5-pin A-coded

Male Bus in/out	Pin no.	Function	Tolerance	Max. current
	1	Drain	–	–
	2	V+ 24 V *22)	±25%	200mA
	3	V- 0 V *22)	–	–
	4	CAN_H	–	–
	5	CAN_L	–	–

Power connector: M12 4-pin A-coded

Male	Pin no.	Function	Tolerance	Max. current
	1	-	-	-
	2	24 VA valves	±10%	*20)
	3	0 V	–	*21)
	4	Earth	–	–

*20) Imax = 10 mA + n*60 mA
*21) Imax = IVA + IVB
*22) Must be galvanic isolated to 24 VA valves
n = number of energized solenoids

Our policy is one of continued research and development. We therefore reserve the right to amend, without notice, the specifications given in this document. (2005 - 5003g) © 2020 IMI International s.r.o.

IO-Link (Port Class B): Connector: 1 x M12 5-pin

IO-Link

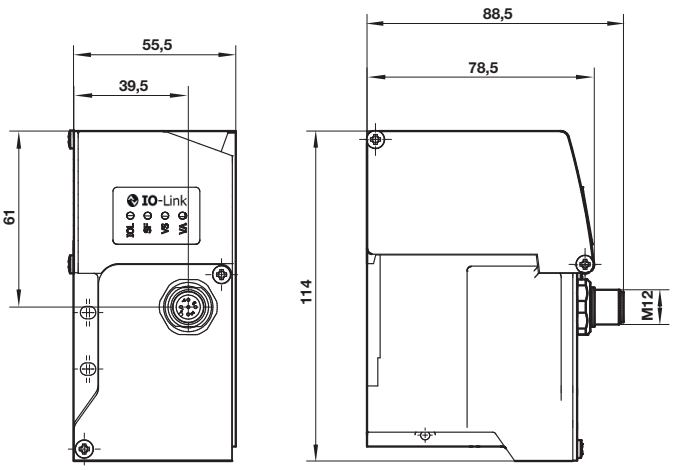

Connector: M12 5-pin A-coded

Male	Pin no.	Function		Toler-ance	Max. current
	1	L+	(VS+) 24V electronics power supply	30%	max. 250 mA
	2	2L+	(VA+) 24V valves power supply	10%	max 25 mA + 70 mA x n
	3	L-	(VS-) 0V electronics power supply		
	4	C/Q	IO-Link communication		
	5	2M	(VA-) 0V valves power supply		

n = number of energized solenoids

Our policy is one of continued research and development. We therefore reserve the right to amend, without notice, the specifications given in this document. (2005 - 5003g) © 2020 IMI International s.r.o.

Fieldbus accessories

Fieldbus power connector	Description	Connection	Cable length	Protection class	Model
	PROFIBUS DP (4-pin, female) DeviceNet (4-pin, female) CANopen (4-pin, female)	M12	Wireable	IP65	V11588-E01
	PROFIBUS DP (5-pin, female)	7/8	Wireable	IP65	VS2672907-KG00
Communication cable and connector					
	DeviceNet (5-pin, female) CANopen (5-pin, female)	M12	Wireable	IP65	V11589-E01
	PROFIBUS DP, reverse keyway (5-pin, female)	M12	Wireable	IP65	V11590-E01
	PROFIBUS DP, reverse keyway (5-pin, male)	M12	Wireable	IP65	V11591-E01
	PROFIBUS DP connector (9-pin, male) with terminating resistor	D-Sub	Wireable	IP40	V11654-E01
	PROFIBUS DP terminating resistor (male)	M12	-	IP65	V11592-E01

Industrial Ethernet accessories

Industrial Ethernet power connector	Description	Connection	Cable length	Protection class	Model
	Industrial Ethernet power connector (5-pin, female)	M12	Wireable	IP65	V11589-E01

Industrial Ethernet - Cable and Connectors

Bus cable: 4-pin D-coded M12 - M12

Model	Cable length (m)
NC-124MS-1244SGA	0,5
NC-124MS-1244SG2	2,0
NC-124MS-1244SG5	5,0

Bus cable: 4-pin D-coded M12 - flying lead

Model	Cable length (m)
NC-124MS-00000G2	2,0
NC-124MS-00000G5	5,0

Bus connector RJ45 Wireable

Model
NC-RJ450-0000000

Power cable: 5-pin A-coded M12 - flying lead

Model	Cable length (m)
NC-125FS-00000-5	5,0

IO-Link - Cables

Cable 5-pin A-code M12 - M12

Model	Cable length (m)
NC-125FS-125MS-A	0,6
NC-125FS-125MS-1	1,0
NC-125FS-125MS-2	2,0
NC-125FS-125MS-5	5,0

Cable 5-pin A-code M12 - flying lead

Model	Cable length (m)
NC-125FS-00000-5	5,0

Our policy is one of continued research and development. We therefore reserve the right to amend, without notice, the specifications given in this document. (2005 - 5003g) © 2020 IMI International s.r.o.

Multipole and Fieldbus component parts
A - Single add-on stations including PCB, sub-base, gasket and screws

Ports 2 & 4	Description	Model
G1/8	Add-on station for D-Sub connectors and Fieldbus	VS1872004-AFF0
NPTF 1/8	Add-on station for D-Sub connectors and Fieldbus	VS1872004-PFF0
PIF6 mm	Add-on station for D-Sub connectors and Fieldbus	VS1872004-6FF0
PIF8 mm	Add-on station for D-Sub connectors and Fieldbus	VS1872004-8FF0
PIF1/4	Add-on station for D-Sub connectors and Fieldbus	VS1872004-1FF0
G1/8	Add-on station for Conduit entry and M23 connector	VS1872005-AFF0
NPTF 1/8	Add-on station for Conduit entry and M23 connector	VS1872005-PFF0
PIF6 mm	Add-on station for Conduit entry and M23 connector	VS1872005-6FF0
PIF8 mm	Add-on station for Conduit entry and M23 connector	VS1872005-8FF0
PIF1/4	Add-on station for Conduit entry and M23 connector	VS1872005-1FF0

Valves and accessories to be ordered separately, see pages 2 ... 8

Step 1

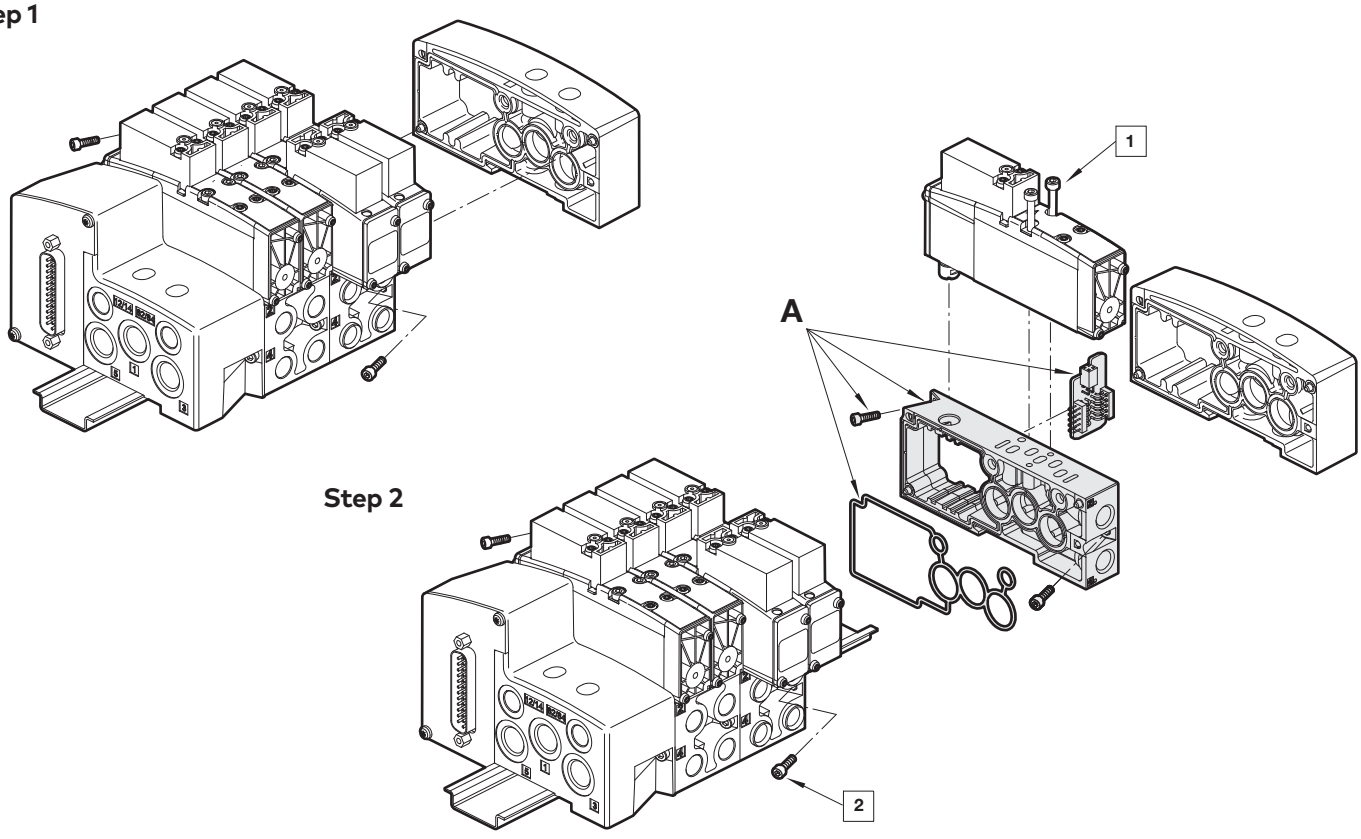

1 Torque = 0,8 ... 0,9 Nm
Screwdriver speed = max. 1100 r.p.m

2 Torque = 0,8 ... 0,9 Nm
Screwdriver speed = max. 1100 r.p.m

For detailed assembly instructions, please see maintenance & instruction booklet

Our policy is one of continued research and development. We therefore reserve the right to amend, without notice, the specifications given in this document. (2005 - 5003g) © 2020 IMI International s.r.o.

Multipole and Fieldbus component parts

End plate kits, sub-bases (without PCB's) including screws and gaskets

A–End plate kit

Description	Ports 1, 3 + 5	Ports 12/14 + 82/84	Model
End plate kit for Multipole	G1/4	G1/8	VS1872000-BFC0
End plate kit for Multipole	NPTF1/4	NPTF 1/8	VS1872000-RFC0
End plate kit for Fieldbus	G1/4	G1/8	VS1872001-BFC0
End plate kit for Fieldbus	NPTF1/4	NPTF 1/8	VS1872001-RFC0

B–Double station modular sub-base

Ports 2 + 4	Model
G1/8	VS1872002-AFF0
NPTF 1/8	VS1872002-PFF0
PIF6 mm	VS1872002-6FF0
PIF8 mm	VS1872002-8FF0
PIF1/4	VS1872002-1FF0

C–Single station modular sub-base

Ports 2 + 4	Model
G1/8	VS1872003-AFF0
NPTF 1/8	VS1872003-PFF0
PIF6 mm	VS1872003-6FF0
PIF8 mm	VS1872003-8FF0
PIF1/4	VS1872003-1FF0

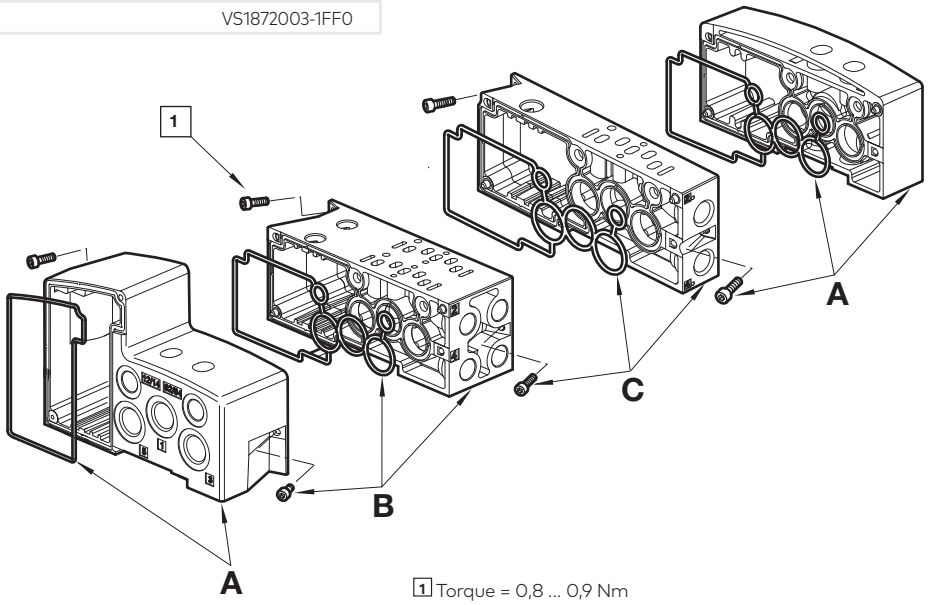

1 Torque = 0,8 ... 0,9 Nm
Screwdriver speed = max. 1100 r.p.m

Note: Never plug port 82/84. Plugging this port will cause valves to malfunction. For detailed assembly instructions, please see maintenance & instruction booklet.

Spare parts

Quantity per slice	Description	Model
2	Hexagon socket screw M3 x 10	77.31055
1	Gasket	94.01015
1	Connector-kit gasket on end plate	94.00816

Our policy is one of continued research and development. We therefore reserve the right to amend, without notice, the specifications given in this document. (2005 - 5003g) © 2020 IMI International s.r.o.

Multipole component parts
A–Output boards with D-Sub connectors

Connector type	Description	Expandable to max. x no. of stations	Voltage	Model
D-Sub 9-pin	Multipole PCB 2 stations	4	24 V d.c.	VS1872217-KF00
D-Sub 15-pin	Multipole PCB 2 stations	6	24 V d.c.	VS1872218-KF00
D-Sub 15-pin	Multipole PCB 4 stations	7	24 V d.c.	VS1872205-KF00
D-Sub 25-pin	Multipole PCB 2 stations	6	24 V d.c.	VS1872219-KF00
D-Sub 25-pin	Multipole PCB 4 stations	8	24 V d.c.	VS1872200-KF00
D-Sub 25-pin	Multipole PCB 6 stations	10	24 V d.c.	VS1872201-KF00
D-Sub 25-pin	Multipole PCB 8 stations	12	24 V d.c.	VS1872202-KF00
D-Sub 44-pin	Multipole PCB 8 stations	12	24 V d.c.	VS1872203-KF00
D-Sub 44-pin	Multipole PCB 10 stations	14	24 V d.c.	VS1872206-KF00
D-Sub 44-pin	Multipole PCB 12 stations	16	24 V d.c.	VS1872204-KF00
D-Sub 44-pin	Multipole PCB 16 stations	20	24 V d.c.	VS1872207-KF00

Valves and accessories to be ordered separately, see pages 2 ... 8

Expansion output boards for D-Sub connectors

Description	Voltage	Model
Multipole PCB 1 station	24 V d.c.	VS1872255-KF00
Multipole PCB 2 stations	24 V d.c.	VS1872213-KF00

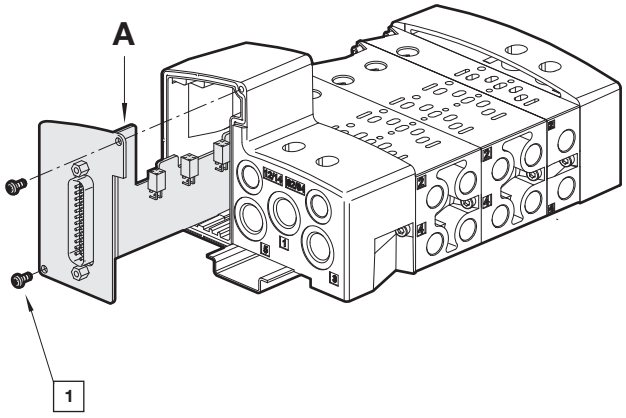

[1] Torque = 0,8 ... 0,9 Nm
Screwdriver speed = max. 1100 r.p.m

For detailed assembly instructions, please see maintenance & instruction booklet

Our policy is one of continued research and development. We therefore reserve the right to amend, without notice, the specifications given in this document. (2005 - 5003g) © 2020 IMI International s.r.o.

Multipole and conduit entry component parts including screws and gaskets

A–End plate kit

Description	Voltage	Model
E-Connector-kit NPTF1 Conduit entry	115 V a.c., 24 V d.c.	VS2672742-KG00

Expansion output boards for conduit entry and M23 connector

Description	Voltage	Model
Multipole PCB 1 station	115 V a.c., 24 V d.c.	VS1872256-KF00
Multipole PCB 2 stations	115 V a.c., 24 V d.c.	VS1872215-KF00

B–Output boards for conduit entry and M23 connector

Description	Expandable to max. x no. of stations	Voltage	Model
Multipole PCB 2 stations	6	115 V a.c., 24 V d.c.	VS1872208-KF00
Multipole PCB 4 stations	8	115 V a.c., 24 V d.c.	VS1872209-KF00
Multipole PCB 6 stations	10	115 V a.c., 24 V d.c.	VS1872210-KF00
Multipole PCB 8 stations	12	115 V a.c., 24 V d.c.	VS1872211-KF00

C–Connector-kit for M23 connector

Description	Voltage	Model
E-Connector-kit M23 connector 19-pin	115 V a.c., 24 V d.c.	VS2672743-KG00

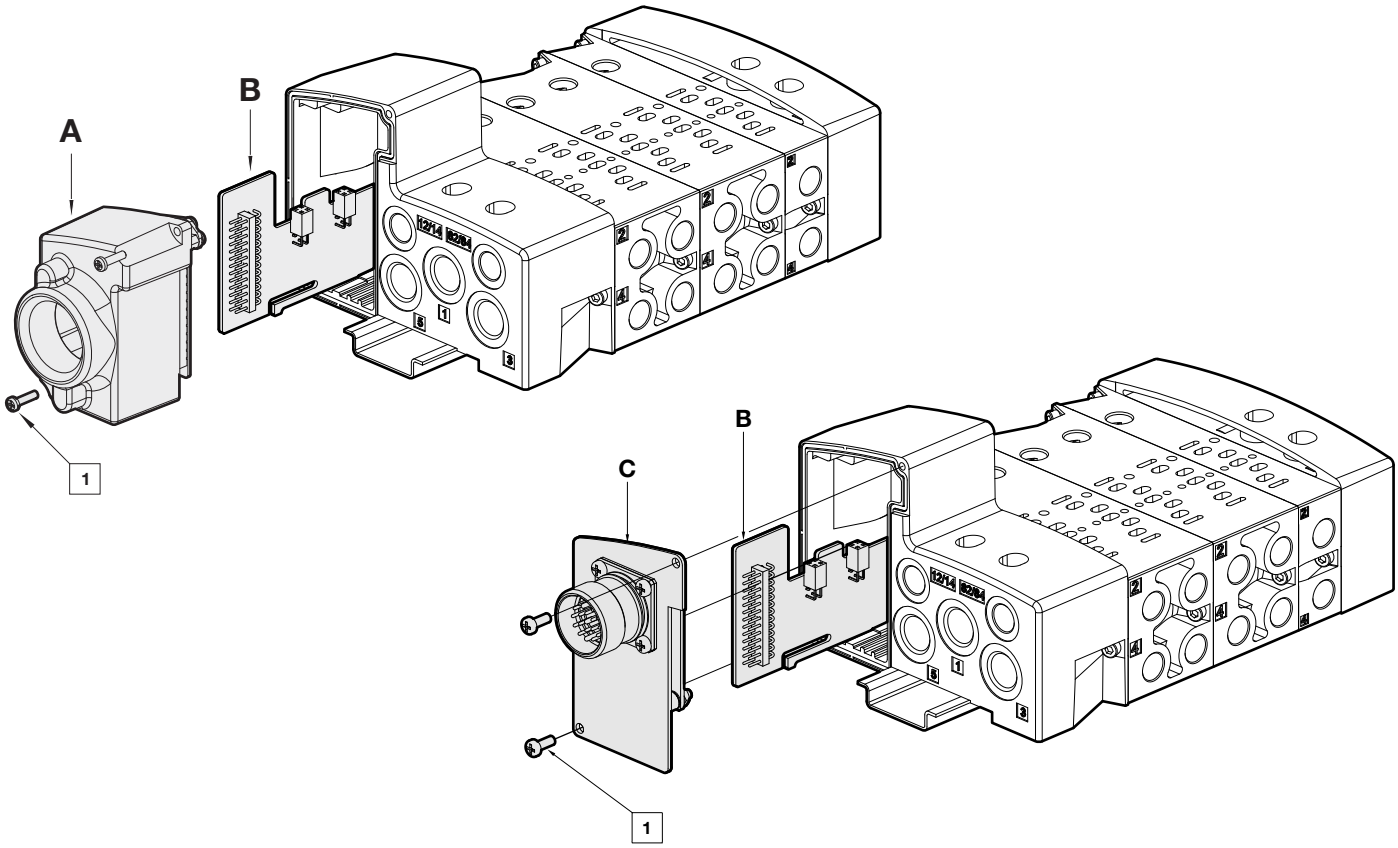

[1] Torque = 0,8 ... 0,9 Nm
Screwdriver speed = max. 1100 r.p.m

For detailed assembly instructions, please see maintenance & instruction booklet

Our policy is one of continued research and development. We therefore reserve the right to amend, without notice, the specifications given in this document. (2005 - 5003g) © 2020 IMI International s.r.o.

Industrial Ethernet and IO-Link expansion

A–Two station PCB

Description	Model
Double station end- and extension PCB	VS1872264-KF00

B–Double station modular sub-base

Ports 2 + 4	Model
G1/8	VS1872002-AFF0
NPTF 1/8	VS1872002-PFF0
PIF6 mm	VS1872002-6FF0
PIF8 mm	VS1872002-8FF0
PIF1/4	VS1872002-1FF0

Additionally available PCBs

Description	Model
Four station end- and extension PCB	VS1872262-KF00
Single station blank PCB (no valve connections)	VS1872263-KF00

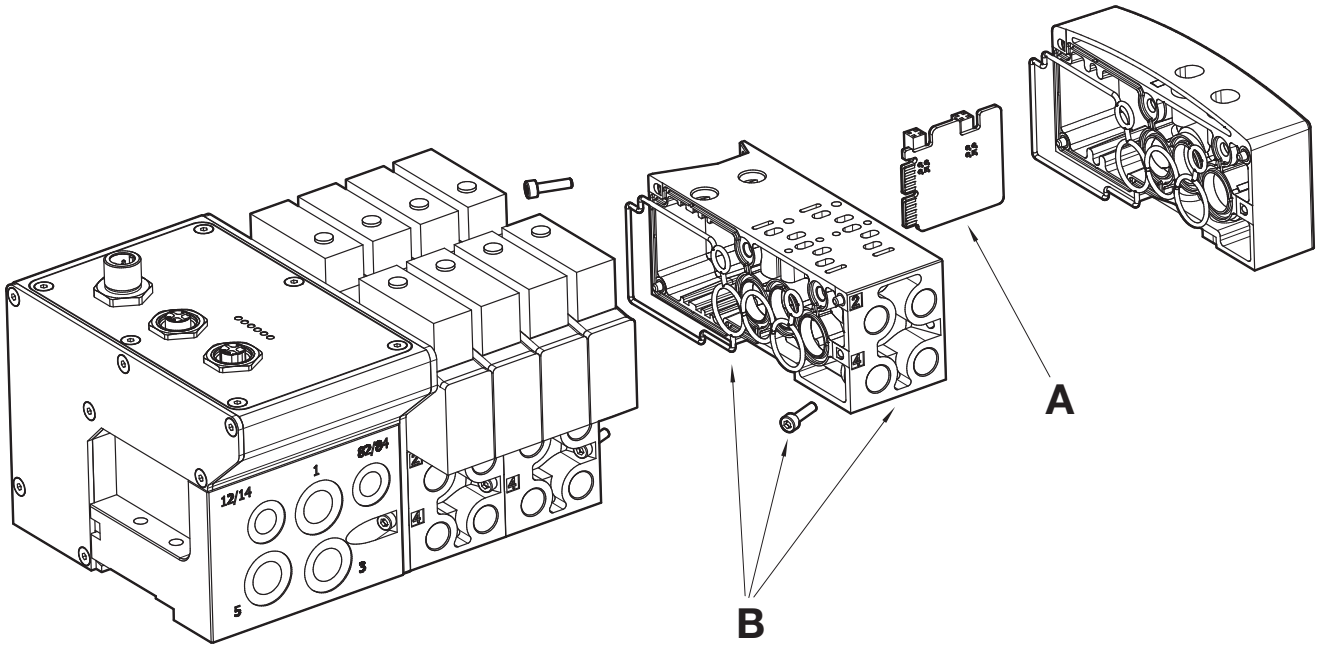

Our policy is one of continued research and development. We therefore reserve the right to amend, without notice, the specifications given in this document. (2005 - 5003g) © 2020 IMI International s.r.o.

Part numbering for complete valve islands

VS18★★★★00-★★★★★

Number of stations*	Substitute
1 stations	**01**
2 stations	**02**
3 stations	**03**
4 stations	**04**
5 stations	**05**
6 stations	**06**
7 stations	**07**
8 stations	**08**
9 stations	**09**
10 stations	**10**
11 stations	**11**
12 stations	**12**
13 stations	**13**
14 stations	**14**
15 stations	**15**
16 stations	**16**
17 stations	**17**
18 stations	**18**
19 stations	**19**
20 stations	**20**
Electrical connection	**Substitute**
Single Station	**SS**
Multipole D-Sub 9 pin	**M9**
Multipole D-Sub 15 pin	**M1**
Multipole D-Sub 25 pin	**M2**
Multipole M23 19 pin	**M3**
Multipole D-Sub 44 pin	**M4**
Conduit NPT	**CD**
PROFIBUS DP	**PB**
PROFINET IRT	**PN**
DeviceNet	**DN**
EtherNet/IP	**EP**
CANopen	**CO**
IO-Link	**IL**

* Multipole: 2 to 20 stations
Fieldbus: 2 to 16 stations
Industrial Ethernet: 4 to 20 stations
IO-Link: 2 to 20 stations

To be defined by online Valve Island configurator based on valve slice selection

To configure and order a valve island visit - https://www.norgren.com/uk/en/vic_landing.aspx

Our policy is one of continued research and development. We therefore reserve the right to amend, without notice, the specifications given in this document. (2005 - 5003g) © 2020 IMI International s.r.o.

Descriptions and short codes for valve slices used in the Valve Island configurator

Function 2 x 2/2 softseal	Actuation / return	Pilot supply	Manual override	Voltage	Short code	Model	ATEX Short code	ATEX Model
NC	Sol/Spring	Internal	Push only	24 V d.c. 1,2 W	STU	VS18SE11DF313A	XTU	VS18SE11DF313E
NC	Sol/Spring	Internal	Push only	115 V a.c. 1,5 VA	TTU	VS18SE11DF318A	-	-
NC	Sol/Spring	Internal	Push & turn	24 V d.c. 1,2 W	STT	VS18SE11DF213A	XTT	VS18SE11DF213E
NC	Sol/Spring	Internal	Push & turn	115 V a.c. 1,5 VA	TTT	VS18SE11DF218A	-	-
NC	Sol/Spring	Internal	Extended, Push only	24 V d.c. 1,2 W	STE	VS18SE11DF513A	XTE	VS18SE11DF513E
NC	Sol/Spring	Internal	Extended, Push only	115 V a.c. 1,5 VA	TTE	VS18SE11DF518A	-	-
NC	Sol/Spring	External	Push only	24 V d.c. 1,2 W	SWU	VS18SE22DF313A	XWU	VS18SE22DF313E
NC	Sol/Spring	External	Push only	115 V a.c. 1,5 VA	TWU	VS18SE22DF318A	-	-
NC	Sol/Spring	External	Push & turn	24 V d.c. 1,2 W	SWT	VS18SE22DF213A	XWT	VS18SE22DF213E
NC	Sol/Spring	External	Push & turn	115 V a.c. 1,5 VA	TWT	VS18SE22DF218A	-	-
NC	Sol/Spring	External	Extended, Push only	24 V d.c. 1,2 W	SWE	VS18SE22DF513A	XWE	VS18SE22DF513E
NC	Sol/Spring	External	Extended, Push only	115 V a.c. 1,5 VA	TWE	VS18SE22DF518A	-	-
NO	Sol/Spring	Internal	Push only	24 V d.c. 1,2 W	SUU	VS18SF11DF313A	XUU	VS18SF11DF313E
NO	Sol/Spring	Internal	Push only	115 V a.c. 1,5 VA	TUU	VS18SF11DF318A	-	-
NO	Sol/Spring	Internal	Push & turn	24 V d.c. 1,2 W	SUT	VS18SF11DF213A	XUT	VS18SF11DF213E
NO	Sol/Spring	Internal	Push & turn	115 V a.c. 1,5 VA	TUT	VS18SF11DF218A	-	-
NO	Sol/Spring	Internal	Extended, Push only	24 V d.c. 1,2 W	SUE	VS18SF11DF513A	XUE	VS18SF11DF513E
NO	Sol/Spring	Internal	Extended, Push only	115 V a.c. 1,5 VA	TUE	VS18SF11DF518A	-	-
NO	Sol/Spring	External	Push only	24 V d.c. 1,2 W	SXU	VS18SF22DF313A	XXU	VS18SF22DF313E
NO	Sol/Spring	External	Push only	115 V a.c. 1,5 VA	TXU	VS18SF22DF318A	-	-
NO	Sol/Spring	External	Push & turn	24 V d.c. 1,2 W	SXT	VS18SF22DF213A	XXT	VS18SF22DF213E
NO	Sol/Spring	External	Push & turn	115 V a.c. 1,5 VA	TXT	VS18SF22DF218A	-	-
NO	Sol/Spring	External	Extended, Push only	24 V d.c. 1,2 W	SXE	VS18SF22DF513A	XXE	VS18SF22DF513E
NO	Sol/Spring	External	Extended, Push only	115 V a.c. 1,5 VA	TXE	VS18SF22DF518A	-	-
NO/NC	Sol/Spring	Internal	Push only	24 V d.c. 1,2 W	SVU	VS18SG11DF313A	XVU	VS18SG11DF313E
NO/NC	Sol/Spring	Internal	Push only	115 V a.c. 1,5 VA	TVU	VS18SG11DF318A	-	-
NO/NC	Sol/Spring	Internal	Push & turn	24 V d.c. 1,2 W	SVT	VS18SG11DF213A	XVT	VS18SG11DF213E
NO/NC	Sol/Spring	Internal	Push & turn	115 V a.c. 1,5 VA	TVT	VS18SG11DF218A	-	-
NO/NC	Sol/Spring	Internal	Extended, Push only	24 V d.c. 1,2 W	SVE	VS18SG11DF513A	XVE	VS18SG11DF513E
NO/NC	Sol/Spring	Internal	Extended, Push only	115 V a.c. 1,5 VA	TVE	VS18SG11DF518A	-	-
NO/NC	Sol/Spring	External	Push only	24 V d.c. 1,2 W	SYU	VS18SG22DF313A	XYU	VS18SG22DF313E
NO/NC	Sol/Spring	External	Push only	115 V a.c. 1,5 VA	TYU	VS18SG22DF318A	-	-
NO/NC	Sol/Spring	External	Push & turn	24 V d.c. 1,2 W	SYT	VS18SG22DF213A	XYT	VS18SG22DF213E
NO/NC	Sol/Spring	External	Push & turn	115 V a.c. 1,5 VA	TYT	VS18SG22DF218A	-	-
NO/NC	Sol/Spring	External	Extended, Push only	24 V d.c. 1,2 W	SYE	VS18SG22DF513A	XYE	VS18SG22DF513E
NO/NC	Sol/Spring	External	Extended, Push only	115 V a.c. 1,5 VA	TYE	VS18SG22DF518A	-	-

Our policy is one of continued research and development. We therefore reserve the right to amend, without notice, the specifications given in this document. (2005 - 5003g) © 2020 IMI International s.r.o.

Function 2 x 3/2 softseal	Actuation / return	Pilot supply	Manual override	Voltage	Short code	Model	ATEX Short code	ATEX Model
NC	Sol/Spring	Internal	Push only	24 V d.c. 1,2 W	SAU	VS18SA11DF313A	XAU	VS18SA11DF313E
NC	Sol/Spring	Internal	Push only	115 V a.c. 1,5 VA	TAU	VS18SA11DF318A	-	-
NC	Sol/Spring	Internal	Push & turn	24 V d.c. 1,2 W	SAT	VS18SA11DF213A	XAT	VS18SA11DF213E
NC	Sol/Spring	Internal	Push & turn	115 V a.c. 1,5 VA	TAT	VS18SA11DF218A	-	-
NC	Sol/Spring	Internal	Extended, Push only	24 V d.c. 1,2 W	SAE	VS18SA11DF513A	XAE	VS18SA11DF513E
NC	Sol/Spring	Internal	Extended, Push only	115 V a.c. 1,5 VA	TAE	VS18SA11DF518A	-	-
NC	Sol/Spring	External	Push only	24 V d.c. 1,2 W	SDU	VS18SA22DF313A	XDU	VS18SA22DF313E
NC	Sol/Spring	External	Push only	115 V a.c. 1,5 VA	TDU	VS18SA22DF318A	-	-
NC	Sol/Spring	External	Push & turn	24 V d.c. 1,2 W	SDT	VS18SA22DF213A	XDT	VS18SA22DF213E
NC	Sol/Spring	External	Push & turn	115 V a.c. 1,5 VA	TDT	VS18SA22DF218A	-	-
NC	Sol/Spring	External	Extended, Push only	24 V d.c. 1,2 W	SDE	VS18SA22DF513A	XDE	VS18SA22DF513E
NC	Sol/Spring	External	Extended, Push only	115 V a.c. 1,5 VA	TDE	VS18SA22DF518A	-	-
NO	Sol/Spring	Internal	Push only	24 V d.c. 1,2 W	SBU	VS18SB11DF313A	XBU	VS18SB11DF313E
NO	Sol/Spring	Internal	Push only	115 V a.c. 1,5 VA	TBU	VS18SB11DF318A	-	-
NO	Sol/Spring	Internal	Push & turn	24 V d.c. 1,2 W	SBT	VS18SB11DF213A	XBT	VS18SB11DF213E
NO	Sol/Spring	Internal	Push & turn	115 V a.c. 1,5 VA	TBT	VS18SB11DF218A	-	-
NO	Sol/Spring	Internal	Extended, Push only	24 V d.c. 1,2 W	SBE	VS18SB11DF513A	XBE	VS18SB11DF513E
NO	Sol/Spring	Internal	Extended, Push only	115 V a.c. 1,5 VA	TBE	VS18SB11DF518A	-	-
NO	Sol/Spring	External	Push only	24 V d.c. 1,2 W	SEU	VS18SB22DF313A	XEU	VS18SB22DF313E
NO	Sol/Spring	External	Push only	115 V a.c. 1,5 VA	TEU	VS18SB22DF318A	-	-
NO	Sol/Spring	External	Push & turn	24 V d.c. 1,2 W	SET	VS18SB22DF213A	XET	VS18SB22DF213E
NO	Sol/Spring	External	Push & turn	115 V a.c. 1,5 VA	TET	VS18SB22DF218A	-	-
NO	Sol/Spring	External	Extended, Push only	24 V d.c. 1,2 W	SEE	VS18SB22DF513A	XEE	VS18SB22DF513E
NO	Sol/Spring	External	Extended, Push only	115 V a.c. 1,5 VA	TEE	VS18SB22DF518A	-	-
NO/NC	Sol/Spring	Internal	Push only	24 V d.c. 1,2 W	SCU	VS18SC11DF313A	XCU	VS18SC11DF313E
NO/NC	Sol/Spring	Internal	Push only	115 V a.c. 1,5 VA	TCU	VS18SC11DF318A	-	-
NO/NC	Sol/Spring	Internal	Push & turn	24 V d.c. 1,2 W	SCT	VS18SC11DF213A	XCT	VS18SC11DF213E
NO/NC	Sol/Spring	Internal	Push & turn	115 V a.c. 1,5 VA	TCT	VS18SC11DF218A	-	-
NO/NC	Sol/Spring	Internal	Extended, Push only	24 V d.c. 1,2 W	SCE	VS18SC11DF513A	XCE	VS18SC11DF513E
NO/NC	Sol/Spring	Internal	Extended, Push only	115 V a.c. 1,5 VA	TCE	VS18SC11DF518A	-	-
NO/NC	Sol/Spring	External	Push only	24 V d.c. 1,2 W	SFU	VS18SC22DF313A	XFU	VS18SC22DF313E
NO/NC	Sol/Spring	External	Push only	115 V a.c. 1,5 VA	TFU	VS18SC22DF318A	-	-
NO/NC	Sol/Spring	External	Push & turn	24 V d.c. 1,2 W	SFT	VS18SC22DF213A	XFT	VS18SC22DF213E
NO/NC	Sol/Spring	External	Push & turn	115 V a.c. 1,5 VA	TFT	VS18SC22DF218A	-	-
NO/NC	Sol/Spring	External	Extended, Push only	24 V d.c. 1,2 W	SFE	VS18SC22DF513A	XFE	VS18SC22DF513E
NO/NC	Sol/Spring	External	Extended, Push only	115 V a.c. 1,5 VA	TFE	VS18SC22DF518A	-	-

Our policy is one of continued research and development. We therefore reserve the right to amend, without notice, the specifications given in this document. (2005 - 5003g) © 2020 IMI International s.r.o.

Function 5/2 softseal	Actuation / return	Pilot supply	Manual override	Voltage	Short code	Model	ATEX Short code	ATEX Model
BI	Sol/Sol	Internal	Push only	24 V d.c. 1,2 W	SJU	VS18S511DF313A	XJU	VS18S511DF313E
BI	Sol/Sol	Internal	Push only	115 V a.c. 1,5 VA	TJU	VS18S511DF318A	-	-
BI	Sol/Sol	Internal	Push & turn	24 V d.c. 1,2 W	SJT	VS18S511DF213A	XJT	VS18S511DF213E
BI	Sol/Sol	Internal	Push & turn	115 V a.c. 1,5 VA	TJT	VS18S511DF218A	-	-
BI	Sol/Sol	Internal	Extended, Push only	24 V d.c. 1,2 W	SJE	VS18S511DF513A	XJE	VS18S511DF513E
BI	Sol/Sol	Internal	Extended, Push only	115 V a.c. 1,5 VA	TJE	VS18S511DF518A	-	-
BI	Sol/Sol	External	Push only	24 V d.c. 1,2 W	SKU	VS18S522DF313A	XKU	VS18S522DF313E
BI	Sol/Sol	External	Push only	115 V a.c. 1,5 VA	TKU	VS18S522DF318A	-	-
BI	Sol/Sol	External	Push & turn	24 V d.c. 1,2 W	SKT	VS18S522DF213A	XKT	VS18S522DF213E
BI	Sol/Sol	External	Push & turn	115 V a.c. 1,5 VA	TKT	VS18S522DF218A	-	-
BI	Sol/Sol	External	Extended, Push only	24 V d.c. 1,2 W	SKE	VS18S522DF513A	XKE	VS18S522DF513E
BI	Sol/Sol	External	Extended, Push only	115 V a.c. 1,5 VA	TKE	VS18S522DF518A	-	-
MO	Sol/Spring	Internal	Push only	24 V d.c. 1,2 W	SGU	VS18S517DF313A	XGU	VS18S517DF313E
MO	Sol/Spring	Internal	Push only	115 V a.c. 1,5 VA	TGU	VS18S517DF318A	-	-
MO	Sol/Spring	Internal	Push & turn	24 V d.c. 1,2 W	SGT	VS18S517DF213A	XGT	VS18S517DF213E
MO	Sol/Spring	Internal	Push & turn	115 V a.c. 1,5 VA	TGT	VS18S517DF218A	-	-
MO	Sol/Spring	Internal	Extended, Push only	24 V d.c. 1,2 W	SGE	VS18S517DF513A	XGE	VS18S517DF513E
MO	Sol/Spring	Internal	Extended, Push only	115 V a.c. 1,5 VA	TGE	VS18S517DF518A	-	-
MO	Sol/Spring	External	Push only	24 V d.c. 1,2 W	SHU	VS18S527DF313A	XHU	VS18S527DF313E
MO	Sol/Spring	External	Push only	115 V a.c. 1,5 VA	THU	VS18S527DF318A	-	-
MO	Sol/Spring	External	Push & turn	24 V d.c. 1,2 W	SHT	VS18S527DF213A	XHT	VS18S527DF213E
MO	Sol/Spring	External	Push & turn	115 V a.c. 1,5 VA	THT	VS18S527DF218A	-	-
MO	Sol/Spring	External	Extended, Push only	24 V d.c. 1,2 W	SHE	VS18S527DF513A	XHE	VS18S527DF513E
MO	Sol/Spring	External	Extended, Push only	115 V a.c. 1,5 VA	THE	VS18S527DF518A	-	-

Function 5/2 glandless	Actuation / return	Pilot supply	Manual override	Voltage	Short code	Model	ATEX Short code	ATEX Model
BI	Sol/Sol	Internal	Push only	24 V d.c. 1,2 W	GJU	VS18G511DF313A	LJU	VS18G511DF313E
BI	Sol/Sol	Internal	Push only	115 V a.c. 1,5 VA	HJU	VS18G511DF318A	-	-
BI	Sol/Sol	Internal	Push & turn	24 V d.c. 1,2 W	GJT	VS18G511DF213A	LJT	VS18G511DF213E
BI	Sol/Sol	Internal	Push & turn	115 V a.c. 1,5 VA	HJT	VS18G511DF218A	-	-
BI	Sol/Sol	Internal	Extended, Push only	24 V d.c. 1,2 W	GJE	VS18G511DF513A	LJE	VS18G511DF513E
BI	Sol/Sol	Internal	Extended, Push only	115 V a.c. 1,5 VA	HJE	VS18G511DF518A	-	-
BI	Sol/Sol	External	Push only	24 V d.c. 1,2 W	GKU	VS18G522DF313A	LKU	VS18G522DF313E
BI	Sol/Sol	External	Push only	115 V a.c. 1,5 VA	HKU	VS18G522DF318A	-	-
BI	Sol/Sol	External	Push & turn	24 V d.c. 1,2 W	GKT	VS18G522DF213A	LKT	VS18G522DF213E
BI	Sol/Sol	External	Push & turn	115 V a.c. 1,5 VA	HKT	VS18G522DF218A	-	-
BI	Sol/Sol	External	Extended, Push only	24 V d.c. 1,2 W	GKE	VS18G522DF513A	LKE	VS18G522DF513E
BI	Sol/Sol	External	Extended, Push only	115 V a.c. 1,5 VA	HKE	VS18G522DF518A	-	-
BI	Sol(Priority)/Sol	Internal	Push only	24 V d.c. 1,2 W	GSU	VS18G591DF313A	LSU	VS18G591DF313E
BI	Sol(Priority)/Sol	Internal	Push only	115 V a.c. 1,5 VA	HSU	VS18G591DF318A	-	-
BI	Sol(Priority)/Sol	Internal	Push & turn	24 V d.c. 1,2 W	GST	VS18G591DF213A	LST	VS18G591DF213E
BI	Sol(Priority)/Sol	Internal	Push & turn	115 V a.c. 1,5 VA	HST	VS18G591DF218A	-	-
BI	Sol(Priority)/Sol	Internal	Extended, Push only	24 V d.c. 1,2 W	GSE	VS18G591DF513A	LSE	VS18G591DF513E
BI	Sol(Priority)/Sol	Internal	Extended, Push only	115 V a.c. 1,5 VA	HSE	VS18G591DF518A	-	-
BI	Sol(Priority)/Sol	External	Push only	24 V d.c. 1,2 W	GTU	VS18G592DF313A	LTU	VS18G592DF313E
BI	Sol(Priority)/Sol	External	Push only	115 V a.c. 1,5 VA	HTU	VS18G592DF318A	-	-
BI	Sol(Priority)/Sol	External	Push & turn	24 V d.c. 1,2 W	GTT	VS18G592DF213A	LTT	VS18G592DF213E
BI	Sol(Priority)/Sol	External	Push & turn	115 V a.c. 1,5 VA	HTT	VS18G592DF218A	-	-
BI	Sol(Priority)/Sol	External	Extended, Push only	24 V d.c. 1,2 W	GTE	VS18G592DF513A	LTE	VS18G592DF513E
BI	Sol(Priority)/Sol	External	Extended, Push only	115 V a.c. 1,5 VA	HTE	VS18G592DF518A	-	-
MO	Sol/Spring	Internal	Push only	24 V d.c. 1,2 W	GGU	VS18G517DF313A	LGU	VS18G517DF313E
MO	Sol/Spring	Internal	Push only	115 V a.c. 1,5 VA	HGU	VS18G517DF318A	-	-
MO	Sol/Spring	Internal	Push & turn	24 V d.c. 1,2 W	GGT	VS18G517DF213A	LGT	VS18G517DF213E
MO	Sol/Spring	Internal	Push & turn	115 V a.c. 1,5 VA	HGT	VS18G517DF218A	-	-
MO	Sol/Spring	Internal	Extended, Push only	24 V d.c. 1,2 W	GGE	VS18G517DF513A	LGE	VS18G517DF513E
MO	Sol/Spring	Internal	Extended, Push only	115 V a.c. 1,5 VA	HGE	VS18G517DF518A	-	-
MO	Sol/Spring	External	Push only	24 V d.c. 1,2 W	GHU	VS18G527DF313A	LHU	VS18G527DF313E
MO	Sol/Spring	External	Push only	115 V a.c. 1,5 VA	HHU	VS18G527DF318A	-	-
MO	Sol/Spring	External	Push & turn	24 V d.c. 1,2 W	GHT	VS18G527DF213A	LHT	VS18G527DF213E
MO	Sol/Spring	External	Push & turn	115 V a.c. 1,5 VA	HHT	VS18G527DF218A	-	-
MO	Sol/Spring	External	Extended, Push only	24 V d.c. 1,2 W	GHE	VS18G527DF513A	LHE	VS18G527DF513E
MO	Sol/Spring	External	Extended, Push only	115 V a.c. 1,5 VA	HHE	VS18G527DF518A	-	-

Our policy is one of continued research and development. We therefore reserve the right to amend, without notice, the specifications given in this document. (2005 - 5003g) © 2020 IMI International s.r.o.

NORGREN

Function 5/3 softseal	Actuation/ return	Pilot supply	Manual override	Voltage	Short code	Model	ATEX Short code	ATEX Model
APB	Sol/Sol	Internal	Push only	24 V d.c. 1,2 W	SLU	VS18S611DF313A	XLU	VS18S611DF313E
APB	Sol/Sol	Internal	Push only	115 V a.c. 1,5 VA	TLU	VS18S611DF318A	-	-
APB	Sol/Sol	Internal	Push & turn	24 V d.c. 1,2 W	SLT	VS18S611DF213A	XLT	VS18S611DF213E
APB	Sol/Sol	Internal	Push & turn	115 V a.c. 1,5 VA	TLT	VS18S611DF218A	-	-
APB	Sol/Sol	Internal	Extended, Push only	24 V d.c. 1,2 W	SLE	VS18S611DF513A	XLE	VS18S611DF513E
APB	Sol/Sol	Internal	Extended, Push only	115 V a.c. 1,5 VA	TLE	VS18S611DF518A	-	-
APB	Sol/Sol	External	Push only	24 V d.c. 1,2 W	SMU	VS18S622DF313A	XMU	VS18S622DF313E
APB	Sol/Sol	External	Push only	115 V a.c. 1,5 VA	TMU	VS18S622DF318A	-	-
APB	Sol/Sol	External	Push & turn	24 V c.c. 1,2 W	SMT	VS18S622DF213A	XMT	VS18S622DF213E
APB	Sol/Sol	External	Push & turn	115 V a.c. 1,5 VA	TMT	VS18S622DF218A	-	-
APB	Sol/Sol	External	Extended, Push only	24 V d.c. 1,2 W	SME	VS18S622DF513A	XME	VS18S622DF513E
APB	Sol/Sol	External	Extended, Push only	115 V a.c. 1,5 VA	TME	VS18S622DF518A	-	-
COE	Sol/Sol	Internal	Push only	24 V d.c. 1,2 W	SQU	VS18S711DF313A	XQU	VS18S711DF313E
COE	Sol/Sol	Internal	Push only	115 V a.c. 1,5 VA	TQU	VS18S711DF318A	-	-
COE	Sol/Sol	Internal	Push & turn	24 V d.c. 1,2 W	SQT	VS18S711DF213A	XQT	VS18S711DF213E
COE	Sol/Sol	Internal	Push & turn	115 V a.c. 1,5 VA	TQT	VS18S711DF218A	-	-
COE	Sol/Sol	Internal	Extended, Push only	24 V d.c. 1,2 W	SQE	VS18S711DF513A	XQE	VS18S711DF513E
COE	Sol/Sol	Internal	Extended, Push only	115 V a.c. 1,5 VA	TQE	VS18S711DF518A	-	-
COE	Sol/Sol	External	Push only	24 V d.c. 1,2 W	SRU	VS18S722DF313A	XRU	VS18S722DF313E
COE	Sol/Sol	External	Push only	115 V a.c. 1,5 VA	TRU	VS18S722DF318A	-	-
COE	Sol/Sol	External	Push & turn	24 V d.c. 1,2 W	SRT	VS18S722DF213A	XRT	VS18S722DF213E
COE	Sol/Sol	External	Push & turn	115 V a.c. 1,5 VA	TRT	VS18S722DF218A	-	-
COE	Sol/Sol	External	Extended, Push only	24 V d.c. 1,2 W	SRE	VS18S722DF513A	XRE	VS18S722DF513E
COE	Sol/Sol	External	Extended, Push only	115 V a.c. 1,5 VA	TRE	VS18S722DF518A	-	-
Function 5/3 glandless	**Actuation/ return**	**Pilot supply**	**Manual override**	**Voltage**	**Short code**	**Model**	**ATEX Short code**	**ATEX Model**
APB	Sol/Sol	Internal	Push only	24 V d.c. 1,2 W	GLU	VS18G611DF313A	LLU	VS18G611DF313E
APB	Sol/Sol	Internal	Push only	115 V a.c. 1,5 VA	HLU	VS18G611DF318A	-	-
APB	Sol/Sol	Internal	Push & turn	24 V d.c. 1,2 W	GLT	VS18G611DF213A	LLT	VS18G611DF213E
APB	Sol/Sol	Internal	Push & turn	115 V a.c. 1,5 VA	HLT	VS18G611DF218A	-	-
APB	Sol/Sol	Internal	Extended, Push only	24 V d.c. 1,2 W	GLE	VS18G611DF513A	LLE	VS18G611DF513E
APB	Sol/Sol	Internal	Extended, Push only	115 V a.c. 1,5 VA	HLE	VS18G611DF518A	-	-
APB	Sol/Sol	External	Push only	24 V d.c. 1,2 W	GMU	VS18G622DF313A	LMU	VS18G622DF313E
APB	Sol/Sol	External	Push only	115 V a.c. 1,5 VA	HMU	VS18G622DF318A	-	-
APB	Sol/Sol	External	Push & turn	24 V d.c. 1,2 W	GMT	VS18G622DF213A	LMT	VS18G622DF213E
APB	Sol/Sol	External	Push & turn	115 V a.c. 1,5 VA	HMT	VS18G622DF218A	-	-
APB	Sol/Sol	External	Extended, Push only	24 V d.c. 1,2 W	GME	VS18G622DF513A	LME	VS18G622DF513E
APB	Sol/Sol	External	Extended, Push only	115 V a.c. 1,5 VA	HME	VS18G622DF518A	-	-
COE	Sol/Sol	Internal	Push only	24 V d.c. 1,2 W	GQU	VS18G711DF313A	LQU	VS18G711DF313E
COE	Sol/Sol	Internal	Push only	115 V a.c. 1,5 VA	HQU	VS18G711DF318A	-	-
COE	Sol/Sol	Internal	Push & turn	24 V d.c. 1,2 W	GQT	VS18G711DF213A	LQT	VS18G711DF213E
COE	Sol/Sol	Internal	Push & turn	115 V a.c. 1,5 VA	HQT	VS18G711DF218A	-	-
COE	Sol/Sol	Internal	Extended, Push only	24 V d.c. 1,2 W	GQE	VS18G711DF513A	LQE	VS18G711DF513E
COE	Sol/Sol	Internal	Extended, Push only	115 V a.c. 1,5 VA	HQE	VS18G711DF518A	-	-
COE	Sol/Sol	External	Push only	24 V d.c. 1,2 W	GRU	VS18G722DF313A	LRU	VS18G722DF313E
COE	Sol/Sol	External	Push only	115 V a.c. 1,5 VA	HRU	VS18G722DF318A	-	-
COE	Sol/Sol	External	Push & turn	24 V d.c. 1,2 W	GRT	VS18G722DF213A	LRT	VS18G722DF213E
COE	Sol/Sol	External	Push & turn	115 V a.c. 1,5 VA	HRT	VS18G722DF218A	-	-
COE	Sol/Sol	External	Extended, Push only	24 V d.c. 1,2 W	GRE	VS18G722DF513A	LRE	VS18G722DF513E
COE	Sol/Sol	External	Extended, Push only	115 V a.c. 1,5 VA	HRE	VS18G722DF518A	-	-

Warning

These products are intended for use in industrial compressed air systems only. Do not use these products where pressures and temperatures can exceed those listed under **»Technical features/data«**.
Before using these products with fluids other than those specified, for non-industrial applications, life-support systems or other applications not within published specifications, consult IMI Precision Engineering.
Through misuse, age, or malfunction, components used in fluid power systems can fail in various modes.

The system designer is warned to consider the failure modes of all component parts used in fluid power systems and to provide adequate safeguards to prevent personal injury or damage to equipment in the event of such failure.
System designers must provide a warning to end users in the system instructional manual if protection against a failure mode cannot be adequately provided.
System designers and end users are cautioned to review specific warnings found in instruction sheets packed and shipped with these products.

Our policy is one of continued research and development. We therefore reserve the right to amend, without notice, the specifications given in this document. (2005 - 5003g) © 2020 IMI International s.r.o.