NORGREN®

Incorporating BUSCHJOST®

8590420
3/2-way seat valves

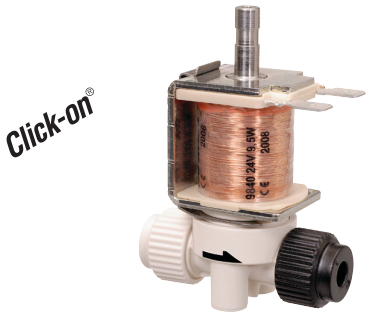

- Port size: DN 2,5
- High flow rate
- Functional compact design
- Solenoid interchangeable without tools (*Click-on*®)
- Good corrosion resistance
- Increased service life
- low maintenance
- International approvals

Technical features

Medium:
Neutral gases and liquids
Switching function:
Normally closed
Version:
Directly solenoid actuated
Mounting position:
Optional, preferably solenoid vertical on top
Flow direction:
Determined

Port size:
- Standard (compression fitting) 2 x ø 6 mm (O/D 6 mm, I/D 4 mm)
- Standard (hose fitting) 1 x ø 6 mm

Operating pressure:
0 ... 2,5 bar (0 ... 36 psi)
Differential pressure:
0 ... 2,5 bar (0 ... 36 psi)
Fluid temperature:
0 ... +125°C (+32 ... +257°F)
Ambient temperature:
0 ... +50°C (+32 ... +122°F)

Material:
Body: PPSU (Polyphenylsulfon)
Seat seal: EPDM
Internal parts: Stainless steel

Components made of PPSU do not come into contact with the following media:
acetone, ether, ketones, aromatic hydrocarbons, chlorinated hydrocarbons, oxidising acids and anaerobic adhesives

Technical data – standard models

Symbol	Port size (mm)	Orifice (mm)	Flow kv value *1) (m³/h)	Operating pressure *2) (bar)	(psi)	Differential pressure (bar)	(psi)	Weight *3) (kg)	Model
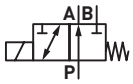	ø 6	2,5	0,15	0 ... 2,5	0 ... 36	0 ... 2,5	0 ... 36	0,17	8590420.9846.xxxxx

xxxxx Please insert voltage and frequency codes
*1) Cv-value (US) ≈ kv value x 1,2
*2) For gases and liquid fluids up to 25 mm²/s (cSt)
*3) Valve only

Our policy is one of continued research and development. We therefore reserve the right to amend, without notice, the specifications given in this document. (2014 - 5110g) © 2020 Buschjost GmbH

Option selector

8590420.9846.★★★★★

Frequency	Substitute
See table frequency codes	**xx**
Voltage	**Substitute**
See voltage codes	**xxx**
Solenoid options	**Substitute**
Voltage 24 V d.c. d.c. 9,5 W Voltage range +0% / –5% Duty cycle 40% ED 3 min SD Terminals 6,3 x 0,8 Protection class IP 00	**9846**

Design acc. to DIN VDE 0580

Further versions on request!

Electrical details for all solenoid systems

According to DIN VDE 0580 at a solenoid temperature of +20°C.
At operating state temperature the input power of a coil decreases by up to ca. 30% due to physical reasons.

Section View

8590420.9846.02400

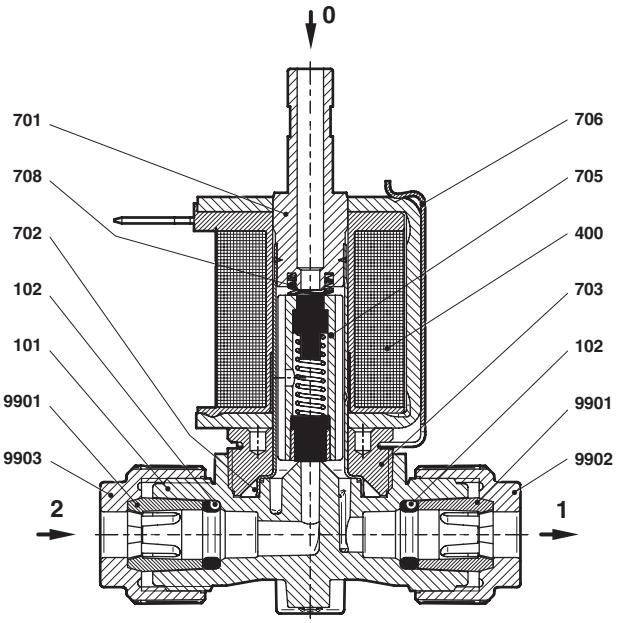

No.	Description
701	Core tube
708	Spring
702	O-Ring
102	O-Ring
101	Valve body
9901	Clamping ring
9903	Union nut
706	Spring band
705	Core
400	Solenoid
703	Screw piece
9902	Union nut

No Spare part orders possible.
For maintenance please state series no. without coil e.g. 8590420.9846.00000.

Our policy is one of continued research and development. We therefore reserve the right to amend, without notice, the specifications given in this document. (2014 - 5110g) © 2020 Buschjost GmbH

Dimensions

8590420.9846.02400

Dimensions in mm
Projection/First angle

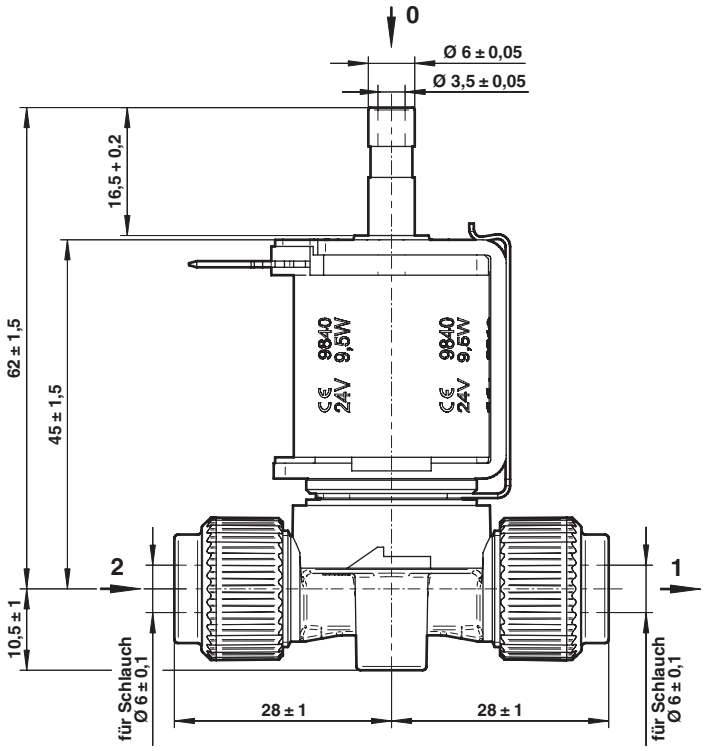

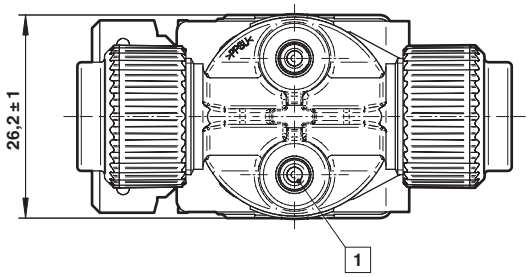

1 Mounting holes
ø 3,8 ± 0,05 x 9,5 ± 0,05 mm deep

Note to Electromagnetic Compatibility Guideline (EEC):

The valves shall be provided with an electrical circuit which ensures the limits of the harmonised standards EN 61000-6-3 and EN 61000-6-1 are observed, and hence the requirements of the Electromagnetic Compatibility Guideline (2014/30/EU) satisfield.

Our policy is one of continued research and development. We therefore reserve the right to amend, without notice, the specifications given in this document. (2014 - 5110g) © 2020 Buschjost GmbH