P82C 3/2 Control Valve
Excelon® Plus Modular System

- **Port size: 1/4" ... 3/8" (ISO G/PTF)**
- **Excelon® Plus design allows in-line installation or modular installation with other Excelon® Plus products**
- **High forward flow capacity**
- **Fast Exhausting**
- **3 port/2 position valve, normally closed**
- **Solenoid and air pilot options**
- **For use as components in safety-related systems according to DIN EN ISO13849 up to a Performance Level (PL)c Cat. 1**
  Safety function: Safe Venting.
- **DoC in accordance with 2014/34/EU/ATEX**

Technical features

Medium:
Compressed air only
Maximum supply pressure:
10 bar (145 psi)
Minimum operating pressure:
3 bar (43 psi)
Port size:
G1/4, G3/8,
1/4 PTF, 3/8 PTF

Flow:
20 dm³/s at port size 1/4"
Full flow P1 to P2 at 6,3 bar (91 psi) inlet, with 0,5 bar (7 psi) pressure drop
P2 to P3 = 20 dm³/s

Ambient/Media temperature:
-20 ... +65°C (-4 ... +149°F)
Air supply must be dry enough to avoid ice formation at temperatures below +2°C (+35°F)

Materials:
Body: Aluminium
End Caps: Aluminum
Body covers: ABS
Elastomers: NBR
Valve: Brass
Air Pilot: Aluminium

Technical data P82C

Symbol	Port Size	Actuating/return	Voltage	Exhaust Port	Weight (kg)	Model
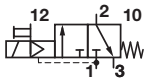	G1/4	Solenoid/spring	24 V d.c.	G1/4	0,43	P82C-2GT-PFN
	G3/8	Solenoid/spring	24 V d.c.	G1/4	0,43	P82C-3GT-PFN
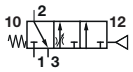	G1/4	Air/spring	N/A	G1/4	0,43	P82C-2GA-NNN
	G3/8	Air/spring	N/A	G1/4	0,43	P82C-3GA-NNN

Electrical details for solenoid operators

Voltage tolerance:	-10%/+15%
Rating:	100% continuous duty
Inlet orifice:	0,8mm
Electrical connection:	15mm DIN EN 175301-803 (DIN 43650) Form C
Manual override:	Shrouded push button, spring return
Protection class:	IP65
Materials:	PP5 (body), NBR (seals)

Our policy is one of continued research and development. We therefore reserve the right to amend, without notice, the specifications given in this document. (2020-9329a) © 2015 IMI International s.r.o.

Option selector

P82C-★★★-★★N

Function	Substitute
3/2 Control Valve	C

Port Size	Substitute
1/4"	2
3/8"	3

Thread Form	Substitute
PTF	A
ISO G	G

Voltage	Substitute
24 V d.c.	F
110 V a.c.	A
220 V a.c.	B
Non	N

Solendoid Operator	Substitute
Non-Locking push button	P
Non	N

Operator *2)	Substitute
Air pilot*1)	A
Solenoid Operated	T

*1) To order air pilot models, select P82C-**A-NNN
*2) ATEX statement can be found online
https://cdn.norgren.com/pdf/IM_Excelon_Plus_EN_final.pdf

Flow characteristics

Port 1 to 2
Port size: 1/4"

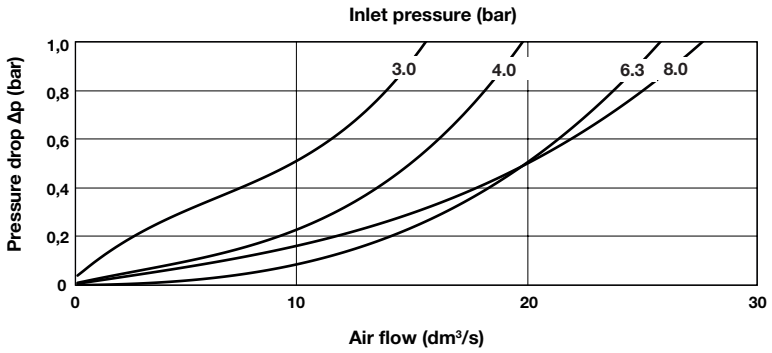

Port 1 to 2
Port size: 3/8"

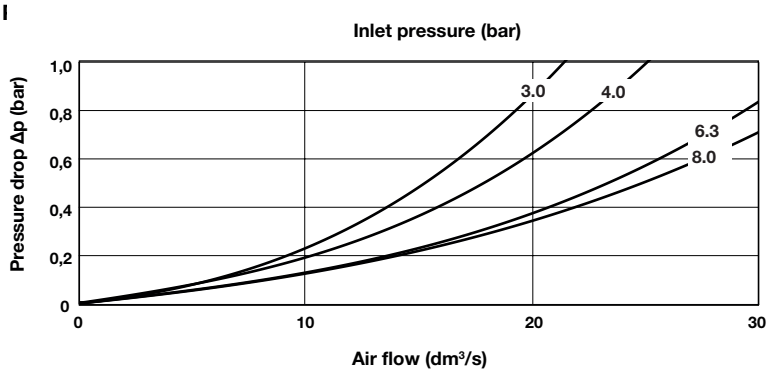

Our policy is one of continued research and development. We therefore reserve the right to amend, without notice, the specifications given in this document. (2020-9329a) © 2015 IMI International s.r.o.

Accessories

Connection cable with plug,LED and M12 Female

Description	Cable length (m)	Model
PUR-Cable; M12/valve type C DIN connector	0,6	NC-DINCA-123MS-A
	1	NC-DINCA-123MS-1
	2	NC-DINCA-123MS-2
	5	NC-DINCA-123MS-5

Plug with with moulded cable and indicator

Voltage	Cable length (m)	Model
12 - 24 V a.c. / d.c	1	V10014-D01
12 - 24 V a.c. / d.c	3	V10014-D03
110 V a.c. / d.c.	1	V10015-D01
110 V a.c. / d.c.	3	V10015-D03
220 V a.c. / d.c	1	V10016-D01
220 V a.c. / d.c	3	V10016-D03

Plug with moulded cable

Description	Cable length (m)	Model
3 pin plug with moulded cable	1	V10013-D01
3 pin plug with moulded cable	3	V10013-D03

Light Emitting Seals ,15mm form C

Description	Model
Light Emitting Seals Circuit A (12 - 24 V d.c.)	V10037-E13
Light Emitting Seals Circuit B (110 - 120 V a.c.)	V10037-E18
Light Emitting Seals Circuit B (220 - 240 V a.c.)	V10037-E19

Plug with cable gland and indicator

Description	Model
Plug with cable gland and indicator 12-24 V a.c. / d.c., c/w LED / VDR	V10012-D13
Plug with cable gland and indicator 110 V a.c. / d.c., c/w LED / VDR	V10012-D18
Plug with cable gland and indicator 220 V a.c. / d.c., c/w LED / VDR	V10012-D19

M12 Adaptor Top - MSUP Valve Plug Form C 8MM

V13981-E01

M12 Adaptor Rear - MSUP Valve Plug Form C 8MM

V13980-E01

Plug with cable gland

V10027-D00

Our policy is one of continued research and development. We therefore reserve the right to amend, without notice, the specifications given in this document. (2020-9329a) © 2015 IMI International s.r.o.

Accessories

Quikclamp®

Page 5

820014-51KIT

Quikclamp® with bracket assembled

Page 5

820014-52KIT

Pressure sensing block 1/4 PTF

Page 5

820016-50KIT

Pressure sensing block G1/4

Page 5

820016-51KIT

Full flow porting block 3/8" PTF

Page 5

820028-50KIT

Full flow porting block G3/8

Page 5

820028-53KIT

Pressure switch interface block (18D pressure switch)

Page 6

0523109000000000

Pneumatic pressure switch 18D (0,5 ... 8 bar) *1)

Page 6

0881300

Digital pressure switch 51D (-1 ... 10 bar) *2)

Page 7

0860810

*1) Flanged version. For other pressure ranges, please see data sheet 5.11.001

*2) For other pressure ranges, please see data sheet 5.11.385

Port Adaptors 1/4 PTF

Page 6

820015-02KIT

Port Adaptors 3/8 PTF

Page 6

820015-03KIT

Port Adaptors G1/4

Page 6

820015-08KIT

Port Adaptors G3/8

Page 6

820015-09KIT

Silencer

Heavy duty muffler, 1/4" NPT male thread, brass wire element

MB002A

Heavy duty muffler, R1/4 male thread, brass wire element

MB002B

Voltage rating and spare coils

	Voltage	Power	Replacement
	24 V d.c.	1,2 W	840650-50KIT
	110 V a.c.	1,5 VA	840650-51KIT
	220 V a.c.	1,5 VA	840650-52KIT

Our policy is one of continued research and development. We therefore reserve the right to amend, without notice, the specifications given in this document. (2020-9329a) © 2015 IMI International s.r.o.

Dimensions

Dimensions in mm
Projection/First angle

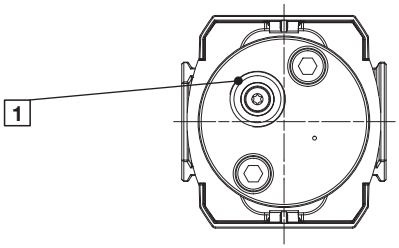

1 1/4" exhaust port (NPT or ISO G)

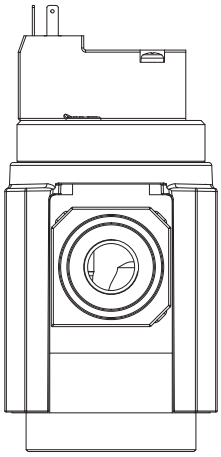

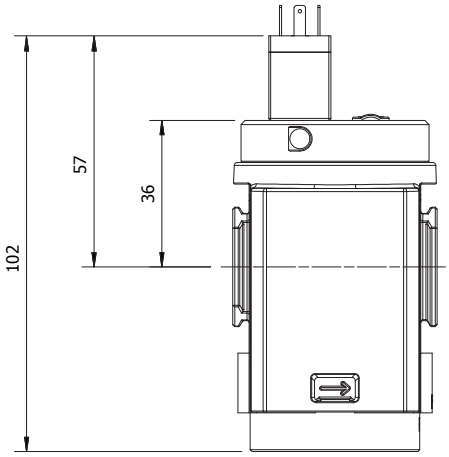

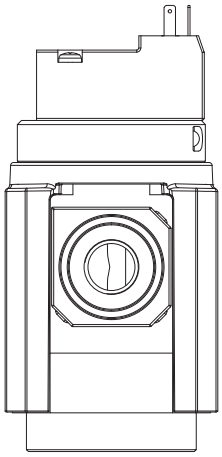

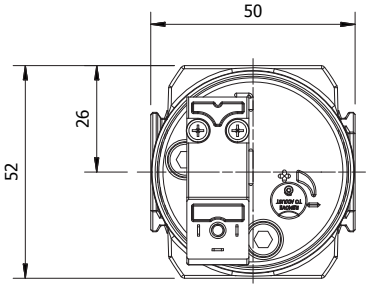

Our policy is one of continued research and development. We therefore reserve the right to amend, without notice, the specifications given in this document. (2020-9329a) © 2015 IMI International s.r.o.

Dimensions

Air Pilot Operator

Dimensions in mm
Projection/First angle

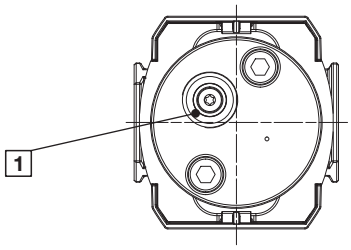

1 1/4" exhaust port (NPT or ISO G)

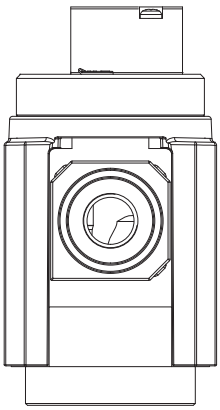

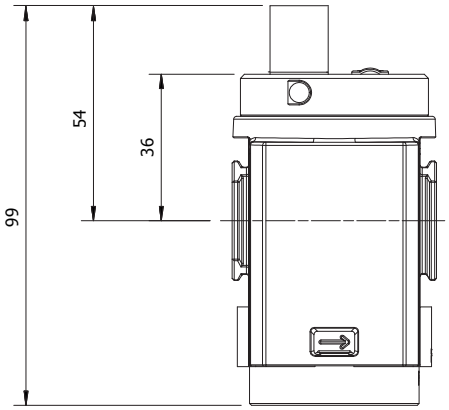

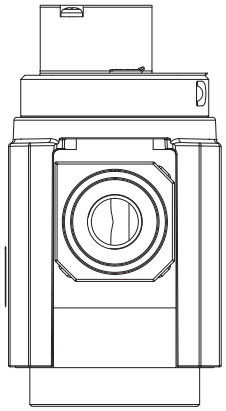

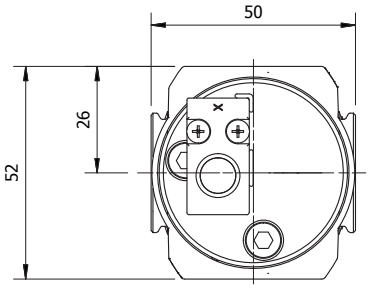

Our policy is one of continued research and development. We therefore reserve the right to amend, without notice, the specifications given in this document. (2020-9329a) © 2015 IMI International s.r.o.

Accessories

Dimensions in mm
Projection/First angle

Quikclamp® with wall bracket

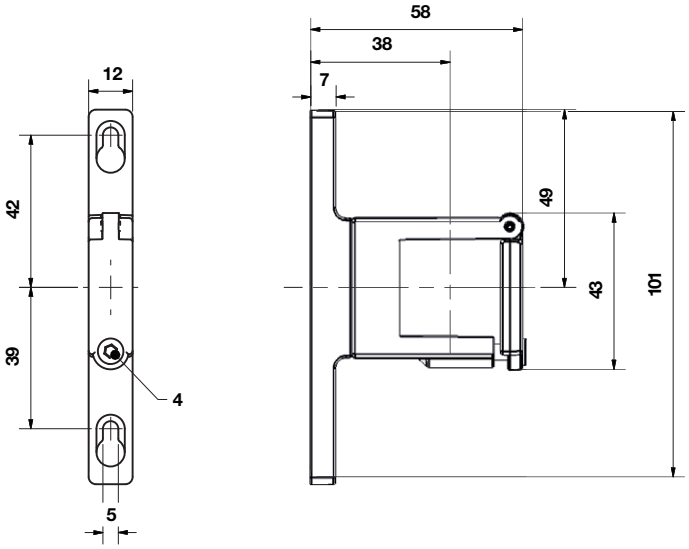

Quikclamp®

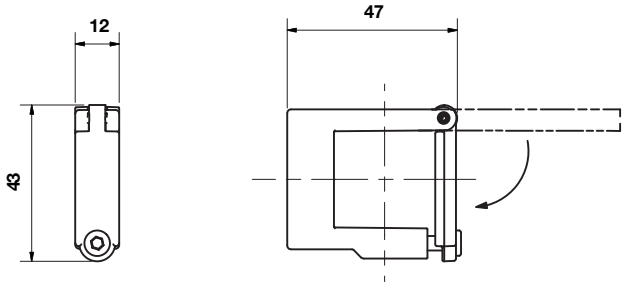

Pressure sensing block

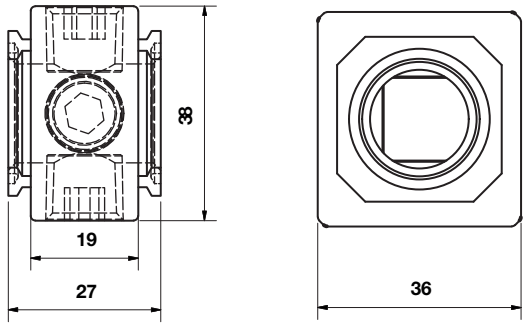

Full flow porting block

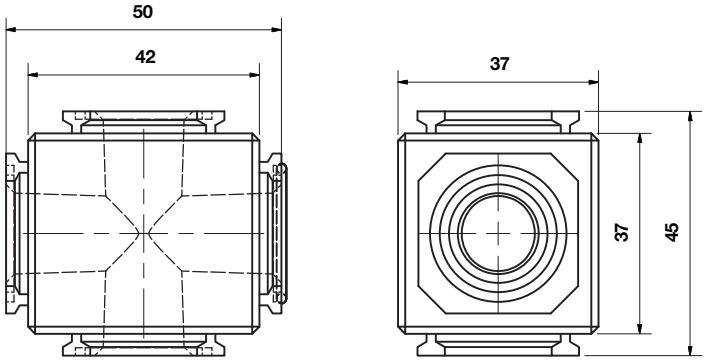

Our policy is one of continued research and development. We therefore reserve the right to amend, without notice, the specifications given in this document. (2020-9329a) © 2015 IMI International s.r.o.

Porting block for 18D pressure switch

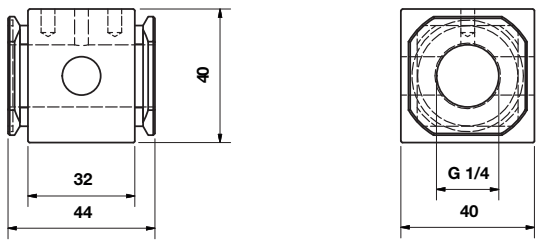

18D Pressure switch

Dimensions in mm
Projection/First angle

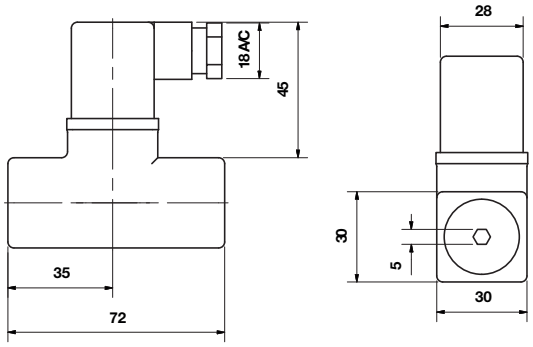

18D Porting block and 18D assembled

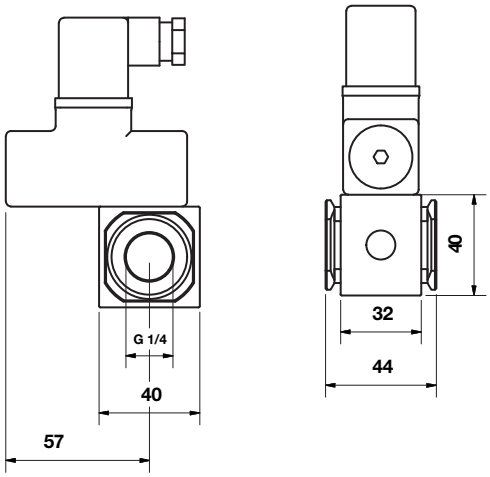

Pipe adaptor

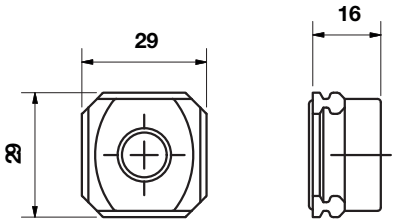

Silencer

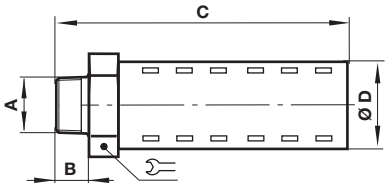

A	B	C	D		Model
R1/4	17	92	32	32	MB002B
1/4 NPT	17	92	32	32	MB002A

Our policy is one of continued research and development. We therefore reserve the right to amend, without notice, the specifications given in this document. (2020-9329a) © 2015 IMI International s.r.o.

51D Pressure switch - digital

Dimensions in mm
Projection/First angle

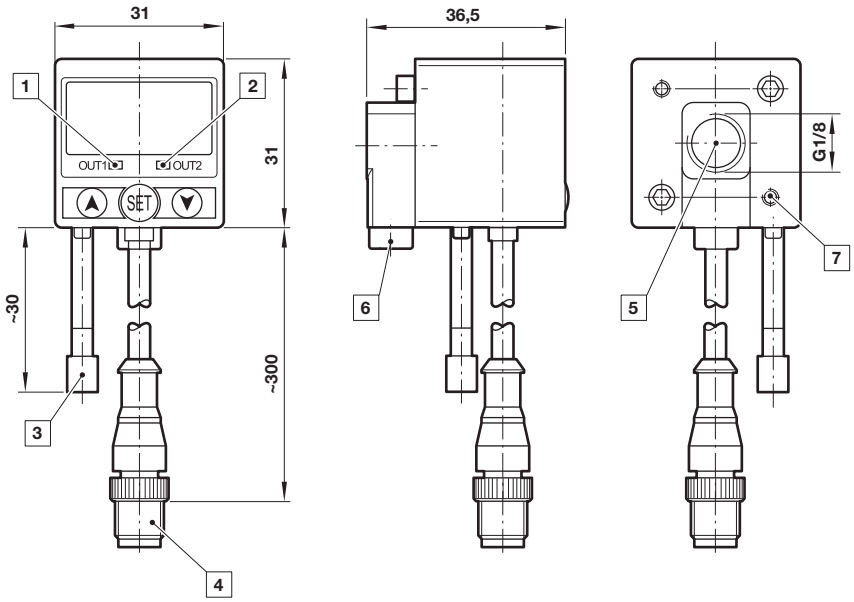

1 Switch OUT 1, green LED
2 Switch OUT 2, red LED
3 Dustproof protector
4 Connector M12 x 1
5 Inlet port
6 Alternative inlet port G1/8 plugged
7 Thread for mounting screw

Warning

These products are intended for use in industrial compressed air systems only. Do not use these products where pressures and temperatures can exceed those listed under »**Technical features/ data**«.
Before using these products with fluids other than those specified, for non-industrial applications, life-support systems or other applications not within published specifications, consult Norgren Ltd.

Through misuse, age, or malfunction, components used in fluid power systems can fail in various modes.

The system designer is warned to consider the failure modes of all component parts used in fluid power systems and to provide adequate safeguards to prevent personal injury or damage to equipment in the event of such failure.
System designers must provide a warning to end users in the system instructional manual if protection against a failure mode cannot be adequately provided.
System designers and end users are cautioned to review specific warnings found in instruction sheets packed and shipped with these products.

Our policy is one of continued research and development. We therefore reserve the right to amend, without notice, the specifications given in this document. (2020-9329a) © 2015 IMI International s.r.o.