LF84V -
Oil vapour removal filter for Rail application
Excelon® Plus Modular System

- **Port size: 3/8" ... 3/4" (ISO G/PTF)**
- **Excelon® Plus design allows in-line installation or modular installation with other Excelon® Plus products**
- **Adsorbing type activated carbon element removes oil vapours and most hydrocarbon odours**
- **Easy filter maintenance system. Element is removed together with the bowl for faster and cleaner servicing**
- **Double safety lock bowl**
- **Salt Spray compliant to ISO 9227 (500 hrs)**
- **Shock and vibration tested to EN61373 Category 2***
  *(includes qualification category 1, class A and B)
- **Fire & Smoke compliant to EN45545-2 (HL3) grouping rules**
- **Air purity class in accordance with ISO8573-1:2010: -:7:0***
  *Tested in accordance with the methods laid out in ISO 12500-2 using an inlet oil aerosol concentration of 0.018mg/m³

EN 61373

+80°C (+176°F)

-40°C (-40°F)

Technical features

Medium:
Compressed air only
Maximum operating pressure:
20 bar (290 psi)
Remaining oil content:
0.003 mg/m³ max. at +21°C (+69°F)
Port size:
G3/8, G1/2, G3/4,
3/8 PTF, 1/2 PTF, 3/4 PTF

Flow:
25 dm³/s
To maintain stated oil content at port size: G1/2
Operating pressure:
6.3 bar (91 psi)
Atex:
Filters LF84 are in conformity with Atex 2014/34/EU
II 2 GD
Ex h IIC T6 Gb
EX h IIIC T85°C Db

Ambient/Media temperature:
-40 ... +80°C (-40 ... +176°F)
Air supply must be dry enough to avoid ice formation at temperatures below +2°C (+35°F).
Note:
Install an LF84C coalescing filter upstream of the LF84V filter for maximum service life.

Materials:
Body: Die cast aluminium
Body covers: Magnum 3904 - High Impact covers
Metal Bowl: Die cast Aluminium
Bowl O-ring:
Low temperature Nitrile
Elastomers:
Low temperature Nitrile

Technical data LF84V - standard models

Symbol	Port size	Drain	Filter element	Bowl	Weight (kg)	Model
	G3/8	Closed bowl	Vapor removal	Metal	0.51	LF84V-3GN-EMA
	G1/2	Closed bowl	Vapor removal	Metal	0.50	LF84V-4GN-EMA
	G3/4	Closed bowl	Vapor removal	Metal	0.49	LF84V-6GN-EMA

Our policy is one of continued research and development. We therefore reserve the right to amend, without notice, the specifications given in this document. (2021-9341a) © 2020 Norgren Ltd

Option selector

LF84V-★★N-EMA

Port size	Substitute
3/8"	**3**
1/2"	**4**
3/4"	**6**

Thread form	Substitute
PTF	**A**
ISO G parallel (standard)	**G**

Typical performance characteristics

Inlet pressure (bar)	Maximum flow (dm³/s) *1)
2.50	15
4.00	20
6.30	25
8.00	28
10.00	30

*1) Maximum flow to maintain stated oil removal performance

Flow characteristics

Port size: 1/2"

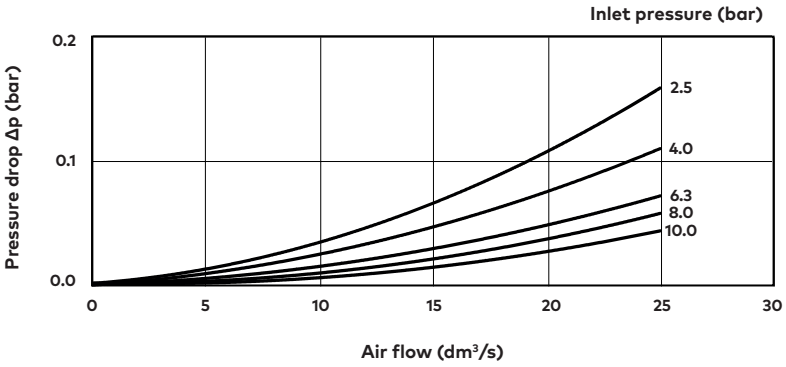

Port size: 3/8"

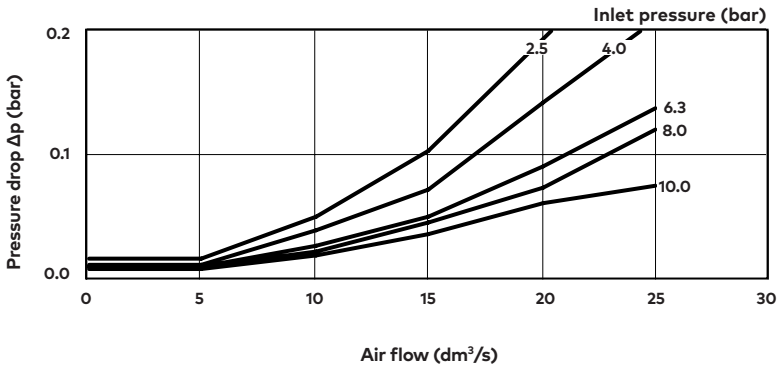

Our policy is one of continued research and development. We therefore reserve the right to amend, without notice, the specifications given in this document. (2021-9341a) © 2020 Norgren Ltd

Accessories

Wall mounting bracket

Page 6

840024-50KIT

Quikclamp®

Page 6

L840014-51KIT

Quikclamp® with bracket assembled

Page 6

L840014-52KIT

Port Adaptors

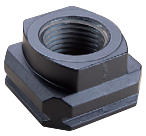

Page 7

3/8 PTF	L840015-02KIT
1/2 PTF	L840015-03KIT
3/4 PTF	L840015-04KIT
G3/8	L840015-10KIT
G1/2	L840015-11KIT
G3/4	L840015-12KIT

Pressure sensing block 1/4 PTF

Page 6

L840016-50KIT

Pressure sensing block G1/4

Page 6

L840016-51KIT

Full flow porting block, horizontal, 3/4 PTF

Page 6

L840028-50KIT

Full flow porting block, horizontal, G3/4

Page 6

L840028-53KIT

Full flow porting block, vertical, 3/4 PTF

Page 6

L840028-68KIT

Full flow porting block, vertical G3/4

Page 6

L840028-69KIT

Maintenance/Service

Vapour Removal filter element

L840041-50KIT

Our policy is one of continued research and development. We therefore reserve the right to amend, without notice, the specifications given in this document. (2021-9341a) © 2020 Norgren Ltd

Dimensions

Dimensions in mm
Projection/Third angle

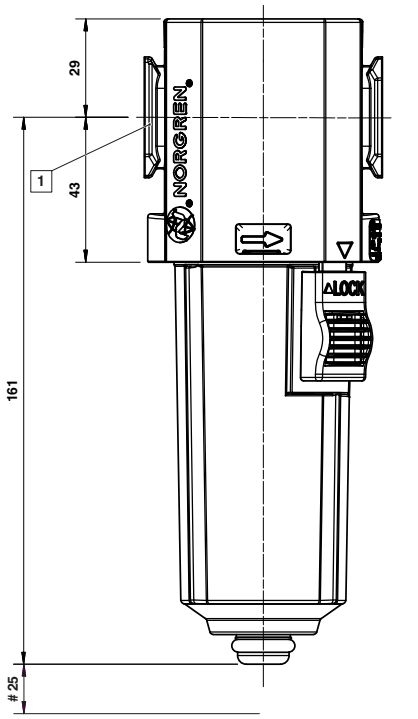

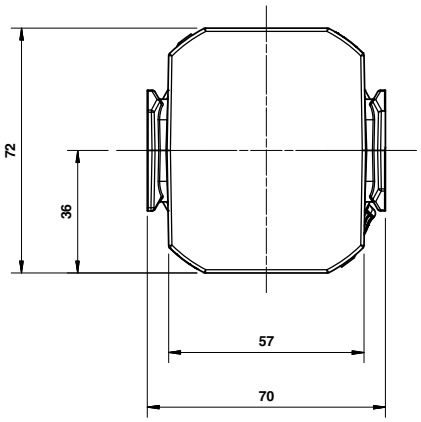

Minimum clearance for bowl removal
1 Main ports 3/8", 1/2" or 3/4"
(ISO G/PTF)

Our policy is one of continued research and development. We therefore reserve the right to amend, without notice, the specifications given in this document. (2021-9341a) © 2020 Norgren Ltd

Accessories

Dimensions in mm

Projection/First angle

Quikclamp® with wall bracket

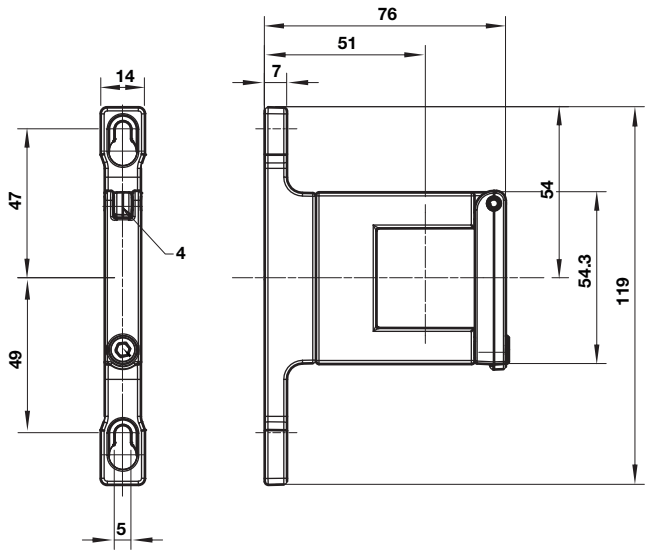

Quikclamp®

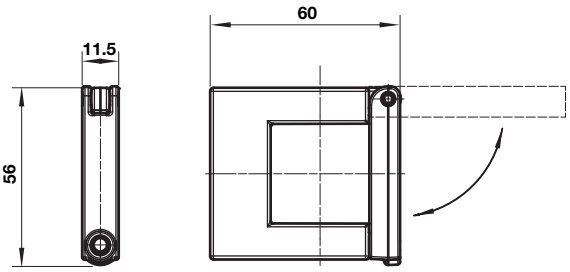

Mounting bracket

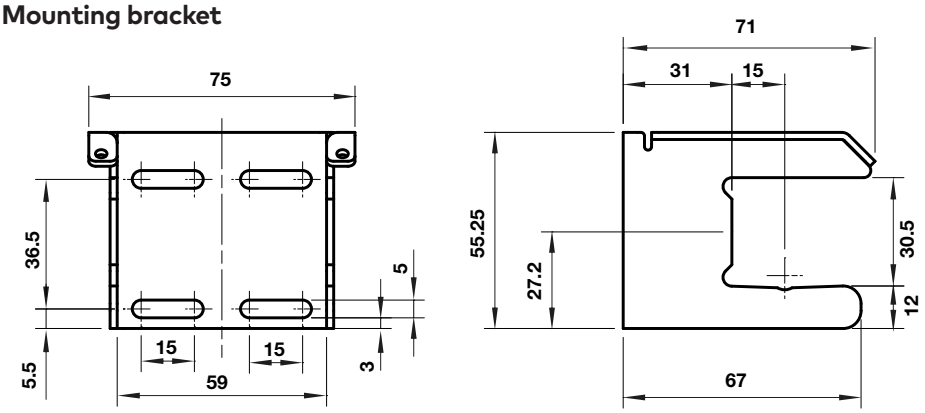

Pressure sensing block

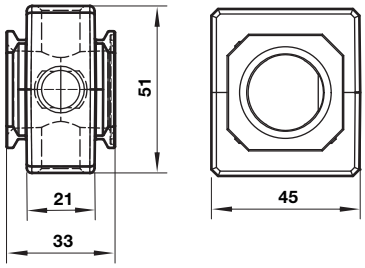

Full flow porting block horizontal

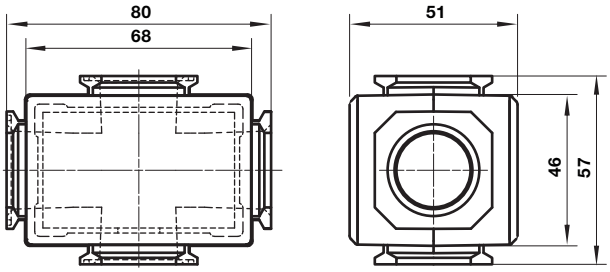

Full flow porting block vertical

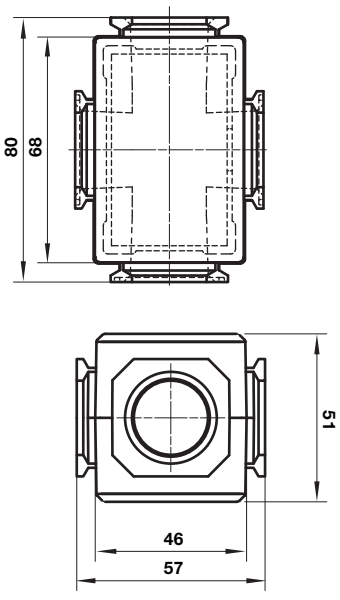

Our policy is one of continued research and development. We therefore reserve the right to amend, without notice, the specifications given in this document. (2021-9341a) © 2020 Norgren Ltd

Pipe adaptor

Dimensions in mm

Projection/First angle

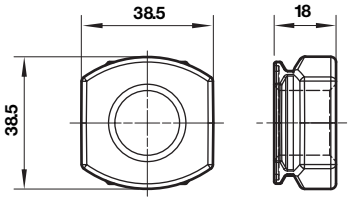

Warning

These products are intended for use in industrial compressed air systems only. Do not use these products where pressures and temperatures can exceed those listed under »**Technical features/ data**«.
Before using these products with fluids other than those specified, for non-industrial applications, life-support systems or other applications not within published specifications, consult Norgren Ltd.

Through misuse, age, or malfunction, components used in fluid power systems can fail in various modes.

The system designer is warned to consider the failure modes of all component parts used in fluid power systems and to provide adequate safeguards to prevent personal injury or damage to equipment in the event of such failure.
System designers must provide a warning to end users in the system instructional manual if protection against a failure mode cannot be adequately provided.
System designers and end users are cautioned to review specific warnings found in instruction sheets packed and shipped with these products.

Our policy is one of continued research and development. We therefore reserve the right to amend, without notice, the specifications given in this document. (2021-9341a) © 2020 Norgren Ltd