- **ø 32 … 125 mm**
- **High stability and reliability**
- **Magnetic switches can be mounted flush with the profile**
- **Cylinders and mountings conform to ISO 15552**

Technical features

Medium:
Compressed air, filtered, lubricated or non-lubricated
Standard:
ISO 15552
Operation:
Double acting, adjustable cushioning
Operating pressure:
1 ... 10 bar (14 ... 145 psi)

Ports:
G1/8 ... G1/2
Cylinder diameters:
32, 40, 50, 63, 80, 100, 125 mm
Standard strokes:
25, 50, 80, 100, 125, 150,160, 175, 200, 250, 320, 350, 400, 450, 500 mm
Non-standard strokes:
Available (5 ... 2000 mm)

Operating temperature:
-5 ... +70°C max. (+23…158°F)
Clean dry air

Standard Materials:
Barrel: Anodised aluminium
End covers: Pressure diecast aluminium
Piston rod: Hard chromium plated
Piston rod seals: PUR
Piston seals: NBR
'O'-rings: NBR

Technical data

Cylinder ø (mm)	32	40	50	63	80	100	125
Profile barrel	•	•	•	•	•	•	•
Port size	G1/8	G1/4	G1/4	G3/8	G3/8	G1/2	G1/2
Piston rod ø (mm)	12	16	20	20	25	25	32
Piston rod thread	M10 x 1.25	M12 x 1.25	M16 x 1.5	M16 x 1.5	M20 x 1.5	M20 x 1.5	M27 x 2
Cushion length mm	20	22	24	24	26	33	39
Cushioning: (adjustable cushion)	•	•	•	•	•	•	•
Initial cushion volume (cm^3)	12.8	20.2	36	64	111	235	427
Theoretical thrusts at 6 bar outstroke (N)	482	754	1178	1870	3016	4710	7363
Theoretical thrusts at 6 bar instroke (N)	414	633	990	1680	2722	4416	6882
Air consumption at 6 bar outstroke (l/cm)	0.056	0.088	0.137	0.218	0.35	0.55	0.86
Air consumption at 6 bar instroke (l/cm)	0.048	0.074	0.114	0.195	0.32	0.51	0.79

Our policy is one of continued research and development. We therefore reserve the right to amend, without notice, the specifications given in this document. (2016 - 9163c) © 2015 Norgren Co. Ltd.

Design and sizing in pneumatics

Golden Rules

Design and sizing in pneumatics is often based upon experience coupled with an element of fear of under specifying crucial equipment. In an attempt to ensure enough power, engineers may select over sized cylinders and then select over sized valves to supply them with enough air. The same uncertainty can also lead to over sized specification of air line equipment, fittings and tubing.
The outcome is components larger than necessary that use too much compressed air and waste energy and money.
However when following some well proven golden rules and a few laws of pneumatics it is easy to achieve correctly sized pneumatic installations.
When selecting a cylinder size and suitable operating pressure, an estimation must be made of the actual thrust required. This is then taken as a percentage of the theoretical thrust of a suitably sized cylinder. The percentage chosen will depend on whether the thrust is required at the end of movement as in a clamping application or during movement such as when lifting a load. The fitment of flow control valves (Metering Out) will reduce the usable thrust.

Basics to Consider

The force required, the pressure available, the speed of movement and air consumption. ISO and VDMA standard or compact style also cushioning and sensors. Cylinders are greased on assembly and operate under normal conditions without additional lubrication. However using a lubricator will extend the life of these products.

Golden Rule:

The theoretical force of the cylinder should be 25% extra for high speed, 50% extra for low speed and 100% extra for ultra low speed (positioning) applications.
The correct sizing is based upon the required force and applied pressure. Go to page 1 for more information on cylinder sizing and air consumption.
The Usable Thrust as a percentage of Theoretical Thrust
Use 90% for clamping and holding applications.
Use 65% to 75% for medium to high speed applications.
Use 50% to 65% for slow speed applications.
Use 40-50% of theoretical thrust for very slow and positioner applications.

Load and Buckling

For applications with high side loading, use pneumatic slide actators or standard cylinders fitted with guide units.
Alternatively external guide bearings should be installed. When a long stroke length is specified, care must be taken to ensure the rod length is within the limits for prevention of buckling. The table shows the maximum stroke length for a variety of installation arrangements.

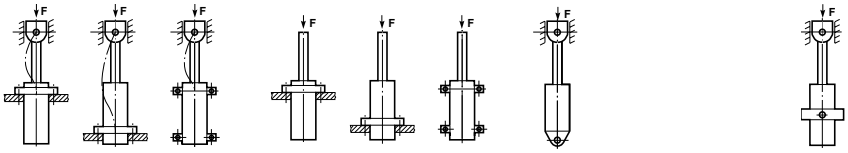

Cylinder ø (mm)	Piston rod ø (mm)	Load case 1 Pressure (bar)			Load case 2 Pressure (bar)			Load case 3 Pressure (bar)			Load case 4 Pressure (bar)		
		4	6	10	4	6	10	4	6	10	4	6	10
32	12	1100	860	650	500	390	290	650	520	380	760	600	450
40	16	1600	1200	950	730	580	430	940	750	560	1100	880	660
50	20	2000	1600	1200	930	740	550	1200	960	720	1400	1100	840
63	20	1500	1200	930	720	570	420	930	740	550	1100	860	650
80	25	1900	1500	1100	880	700	510	1100	910	680	1300	1100	800
100	25	1500	1200	880	670	520	380	880	690	510	1000	820	600
125	32	2000	1600	1200	910	710	520	1200	940	690	1400	1100	820

Our policy is one of continued research and development. We therefore reserve the right to amend, without notice, the specifications given in this document. (2016 - 9163c) © 2015 Norgren Co. Ltd.

Option selector

PCA/702★★★/★/0000/000

Barrel	**Substitute**
Profile	**P**
Piston Rod Material	**Substitute**
Hard Chromium plated	**C**
Standard	**Substitute**
ISO15552	**A**

Piston rod extension (mm)	**Substitute**
No extension	**None**
MU variant extension	**000**
Stroke length (mm)	**Substitute**
0005…2000	
Variants	**Substitute**
Magnetic Piston	**M**
Extended piston rod (Magnetic)	**MU**
Back-to-back	**MT**
Bore size (mm)	**Substitute**
32	**032**
40	**040**
50	**050**
63	**063**
80	**080**
100	**100**
125	**125**

Service kits

Service kit for Round and Profile barrel

ø	
32	QA/702032/00
40	QA/702040/00
50	QA/702050/00
63	QA/702063/00
80	QA/702080/00
100	QA/702100/00
125	QA/702125/00

Our policy is one of continued research and development. We therefore reserve the right to amend, without notice, the specifications given in this document. (2016 - 9163c) © 2015 Norgren Co. Ltd.

Cylinder with Profile barrel ø32 ... 125

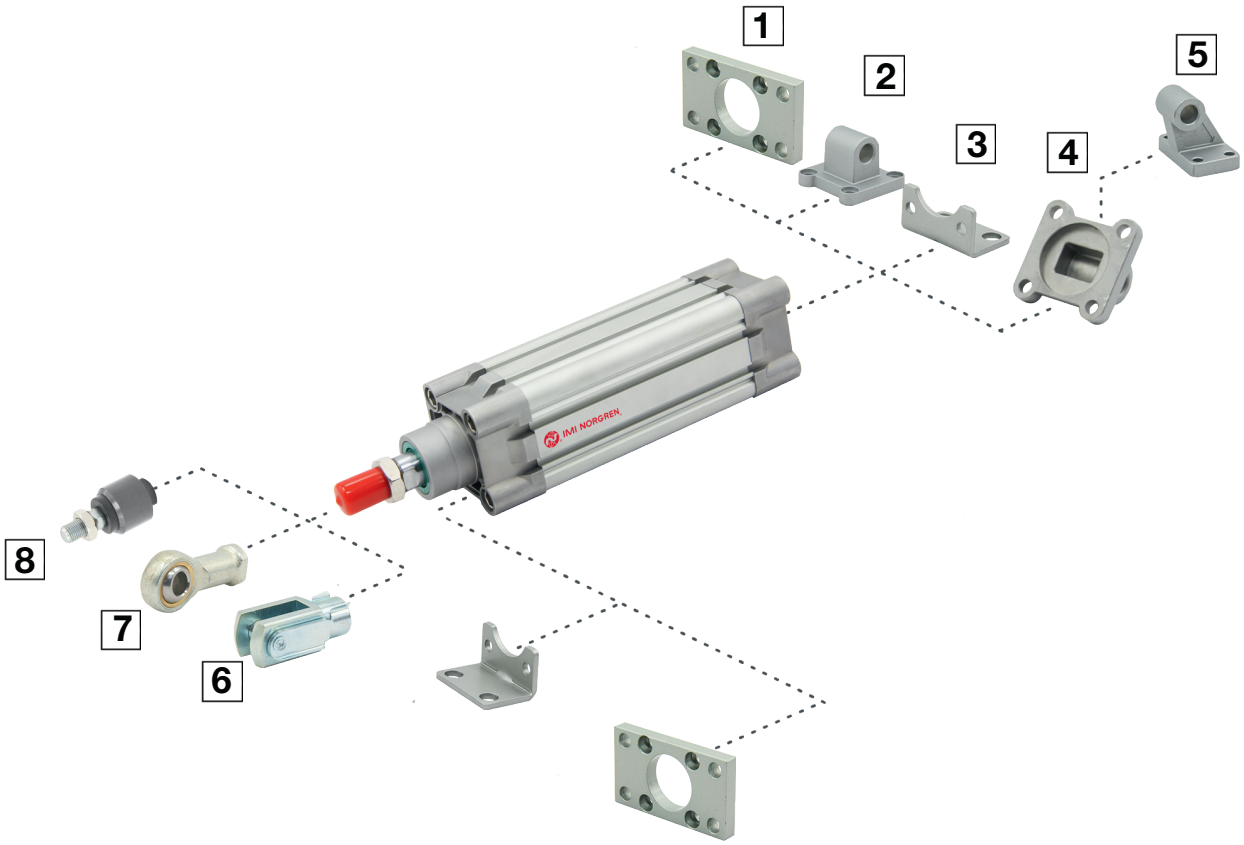

Mountings

Model	B, G	R	C	D	SW	F	UF	AK
ø	1 Page 6	2 Page 6	3 Page 6	4 Page 6	5 Page 7	6 Page 7	7 Page 8	8 Page 8
32	QA/702032/22	QA/702032/27	QA/702032/21	QA/702032/23	A1720-801	QA/702032/25	QA/702032/32	QA/702032/38
40	QA/702040/22	QA/702040/27	QA/702040/21	QA/702040/23	A1720-802	QA/702040/25	QA/702040/32	QA/702040/38
50	QA/702050/22	QA/702050/27	QA/702050/21	QA/702050/23	A1720-803	QA/702050/25	QA/702050/32	QA/702050/38
63	QA/702063/22	QA/702063/27	QA/702063/21	QA/702063/23	A1720-804	QA/702050/25	QA/702050/32	QA/702050/38
80	QA/702080/22	QA/702080/27	QA/702080/21	QA/702080/23	A1720-805	QA/702080/25	QA/702080/32	QA/702080/38
100	QA/702100/22	QA/702100/27	QA/702100/21	QA/702100/23	A1720-806	QA/702080/25	QA/702080/32	QA/702080/38
125	QA/702125/22	QA/702125/27	QA/702125/21	QA/702125/23	–	QA/702125/25	QA/702125/32	–

Our policy is one of continued research and development. We therefore reserve the right to amend, without notice, the specifications given in this document. (2016 - 9163c) © 2015 Norgren Co. Ltd.

Dimensions

Dimensions in mm
Projection/First angle

PCA/702000/M Standard Cylinder

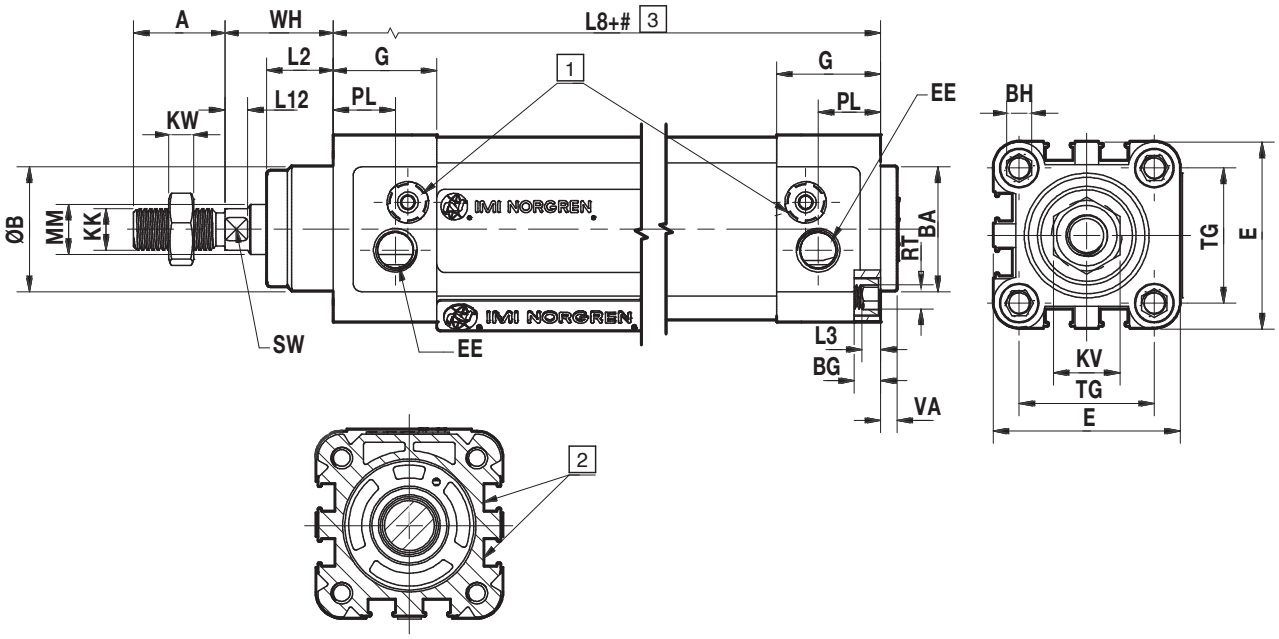

1 Cushion screw
2 Magnetic switch can be mounted flush with the profile
3 # Stroke

ø	A (0/-2)	ø B/BA (d11)	BG	BH	E	KK	KV	KW	L2	L3	PL	RT
32	22	30	15	6	45	M10 x 1.25	16	6	16	3.5	15	M6
40	24	35	15	6	52	M12 x 1.25	18	7	20	3.5	17.5	M6
50	32	40	15	8	65	M16 x 1.5	24	8	26.5	4	20	M8
63	32	45	15	8	76	M16 x 1.5	24	8	26	4	22	M8
80	40	45	18	10	94	M20 x 1.5	30	10	35	4	23	M10
100	40	55	18	10	112	M20 x 1.5	30	10	40	4	25	M10
125	54	60	20	12	134	M27 x 2	41	13.5	46.5	5	29.5	M12

ø	RT	SW	TG	VA	VD	WH	G	ø MM h9	EE	L12	L8	Model
32	M6	10	32.5	4	11	26 (+/-1.4)	25	12	G1/8	7	94 (+/-0.4)	PCA/702032/*
40	M6	13	38	4	9	30 (+/-1.4)	29.5	16	G1/4	7	105 (+/-0.7)	PCA/702040/*
50	M8	17	46.5	4	11	37 (+/-1.4)	32	20	G1/4	7	106 (+/-0.7)	PCA/702050/*
63	M8	17	56.5	4	11.5	37 (+/-1.8)	36	20	G3/8	7	121 (+/-0.8)	PCA/702063/*
80	M10	22	72	4	11	46 (+/-1.8)	37	25	G3/8	9	128 (+/-0.8)	PCA/702080/*
100	M10	22	89	4	15.5	51 (+/-1.8)	39	25	G1/2	9	138 (+/-1)	PCA/702100/*
125	M12	27	110	6	10.5	65 (+/-2.2)	43.5	32	G1/2	12	160	PCA/702125/*

Our policy is one of continued research and development. We therefore reserve the right to amend, without notice, the specifications given in this document. (2016 - 9163c) © 2015 Norgren Co. Ltd.

Dimensions

Dimensions in mm
Projection/First angle

Front flange B,G

Conforms to ISO 15552,type MF1 and MF2

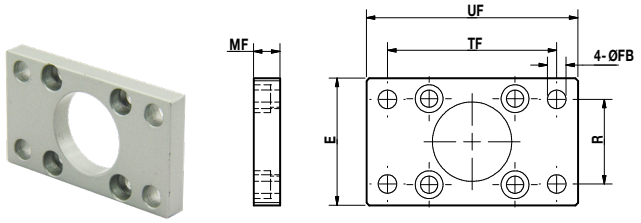

ø	E	ø FB	MF	R	TF	UF	Model
32	48	7	10	32	64	80	QA/702032/22
40	52	9	10	36	72	90	QA/702040/22
50	65	9	12	45	90	110	QA/702050/22
63	76	9	12	50	100	120	QA/702063/22
80	94	12	16	63	126	150	QA/702080/22
100	112	14	16	75	150	175	QA/702100/22
125	140	16	20	90	180	224	QA/702125/22

Rear Clevis D

Conforms to ISO 15552,type MP2

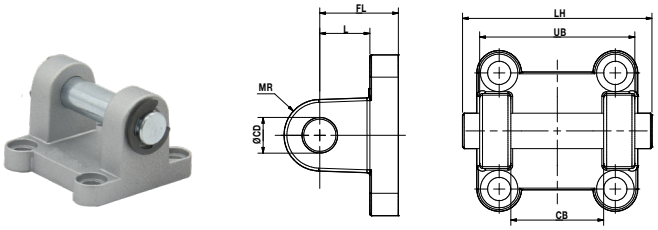

ø	CB (h14)	ø CD	FL	L	LH	MR	UB	Weight (kg)	Model
32	26	10	22	14	53	10	45	0.1	QA/702032/23
40	28	12	25	17	58	11	51	0.14	QA/702040/23
50	32	12	27	17	68	13	60	0.23	QA/702050/23
63	40	16	32	22	78	16	70	0.36	QA/702063/23
80	50	16	36	24	100	16	90	0.57	QA/702080/23
100	60	20	41	25	120	20	110	0.99	QA/702100/23
125	70	25	50	30	136	25	121.5	3.2	QA/702125/23

Foot mounting C

Conforms to ISO 15552, type MS1

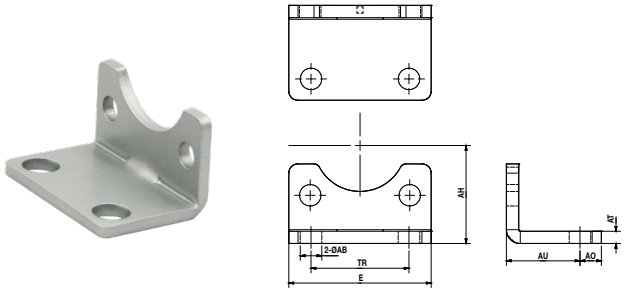

ø	ø AB	AH	AO	AT	AU	E	TR	Model
32	7	32	11	4	24	45	32	QA/702032/21
40	10	36	8	4	28	52	36	QA/702040/21
50	10	45	12	5	32	65	45	QA/702050/21
63	10	50	13	5	32	75	50	QA/702063/21
80	12	63	14	6	41	95	63	QA/702080/21
100	14.5	71	16	6	41	115	75	QA/702100/21
125	16.5	90	18	8	45	140	90	QA/702125/21

Rear eye R

Conforms to ISO 15552,type MP4

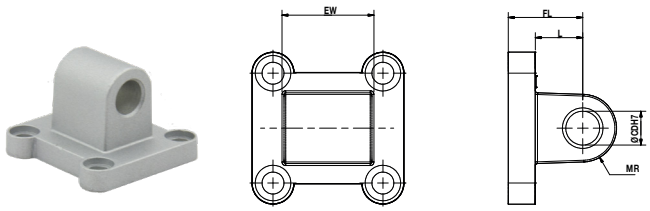

ø	ø CD	EW	FL	L	MR	Weight (kg)	Model
32	10	26	22	14	10	0.07	QA/702032/27
40	12	28	25	17	11	0.08	QA/702040/27
50	12	32	27	17	13	0.17	QA/702050/27
63	16	40	32	22	16	0.26	QA/702063/27
80	16	50	36	24	16	0.41	QA/702080/27
100	20	60	41	25	20	0.73	QA/702100/27
125	25	70	50	30	25	3.1	QA/702125/27

Our policy is one of continued research and development. We therefore reserve the right to amend, without notice, the specifications given in this document. (2016 - 9163c) © 2015 Norgren Co. Ltd.

Dimensions

Dimensions in mm
Projection/First angle

Wide Hinge SW

Conforms to ISO 15552, type AB7

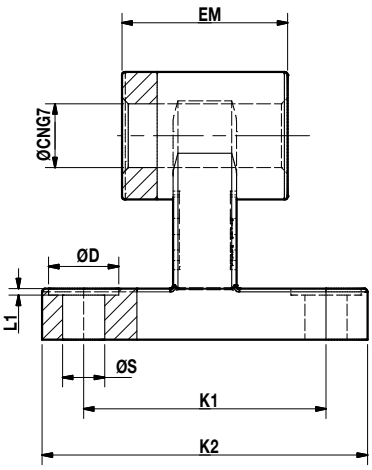

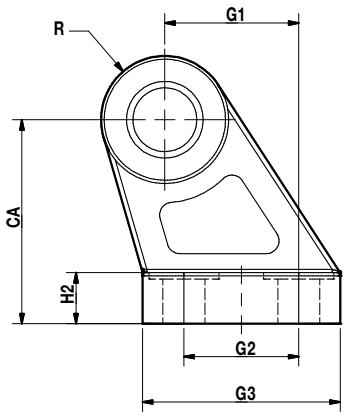

ø	CA	ø CN	ø D	H2	EM	G1	G2	G3	K1	K2	L1	R	ø S	Weight (kg)	Model
32	32	10	11	8	26	21	18	31	38	51	1	10	6.6	0.09	A1720-801
40	36	12	25	10	28	24	22	35	41	54	1	11	6.6	0.1	A1720-802
50	45	12	27	12	32	33	30	45	50	65	0	13	9	0.21	A1720-803
63	50	16	32	12	40	37	35	50	52	67	0	15	9	0.25	A1720-804
80	63	16	36	14	50	47	40	60	66	86	0	15	11	0.42	A1720-805
100	71	20	41	15	60	55	50	70	76	96	0	19	11	0.58	A1720-806

Piston rod clevis F

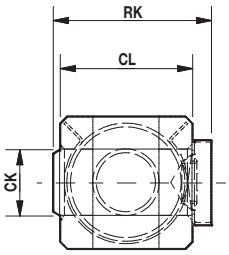

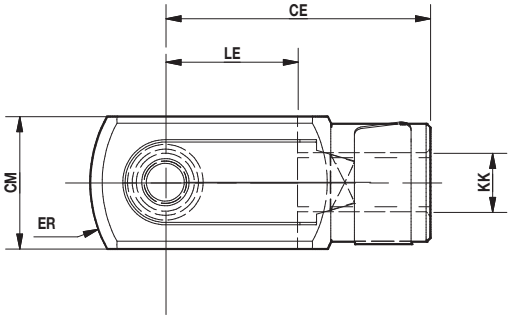

ø	KK	CE	ø CK	CL	CM	ER	LE	RK	Weight (kg)	Model
32	M10 x 1.25	40	10	19	19	20	20	23.6	0.1	QA/702032/25
40	M12 x 1.25	48	12	24	24	25	24	29.8	0.1	QA/702040/25
50/63	M16 x 1.5	64	16	32	32	40	32	36.4	0.3	QA/702050/25
80/100	M20 x 1.5	80	20	40	40	60	40	45.5	0.7	QA/702080/25
125	M27 x 2	110	30	55	55	90	54	65	1.9	QA/702125/25

Our policy is one of continued research and development. We therefore reserve the right to amend, without notice, the specifications given in this document. (2016 - 9163c) © 2015 Norgren Co. Ltd.

Dimensions

Dimensions in mm
Projection/First angle

Universal piston rod eye
UF

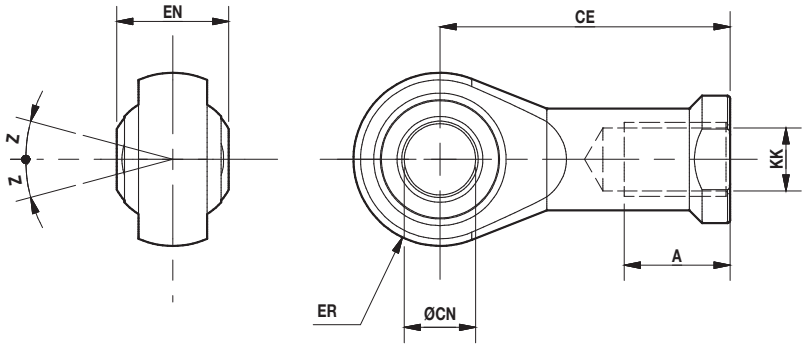

ø	KK	A	CE	CN	EN	ER	Z	Weight (kg)	Model
32	M10 x 1.25	18	45	10	14	14	15	0.07	QA/702032/32
40	M12 x 1.25	22	51	12	16	16	15	0.1	QA/702040/32
50/63	M16 x 1.5	28	64	16	21	20	15	0.22	QA/702050/32
80/100	M20 x 1.5	35	77	20	25	25	15	0.39	QA/702080/32
125	M27 x 2	58	110	30	36	35	15	1.1	QA/702125/32

Piston rod swivel AK

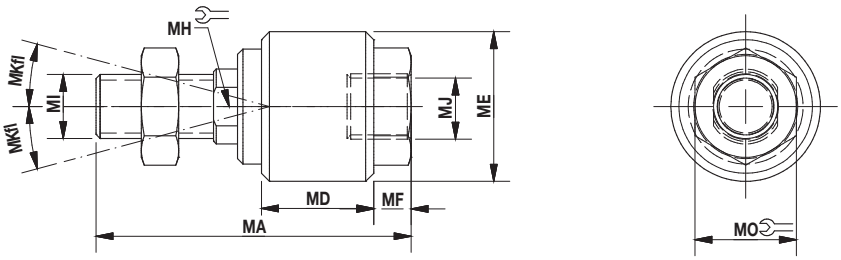

ø	MI/MJ	MB	MA	MD	MF	MK°	ø ME	MH	MO	Weight (kg)	Model
32	M10 x 1.25	22	58	21	11.5	12	26	10	17	0.11	QA/702032/38
40	M12 x 1.25	22	58	21	11.5	12	28	12	19	0.18	QA/702040/38
50/63	M16 x 1.5	27	90	41	20	7	44.5	17	27	0.5	QA/702050/38
80/100	M20 x 1.5	29	102	46	24	10	53	22	22	0.79	QA/702080/38

Our policy is one of continued research and development. We therefore reserve the right to amend, without notice, the specifications given in this document. (2016 - 9163c) © 2015 Norgren Co. Ltd.

Dimensions

Dimensions in mm
Projection/First angle

Magnetic Switch

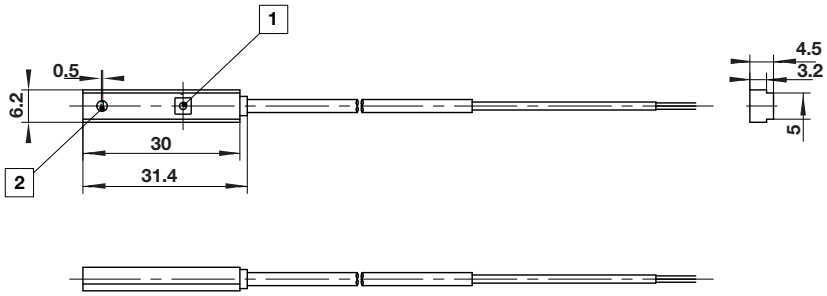

1 Light
2 Fixing screw M2.5

Technical data – Magnetic switch

Symbol	Voltage (V d.c.)	Current maximum (mA)	Function	Operating temperature (°C)	LED	Protection class	Cable length (m)	Cable type	Weight (g)	Model
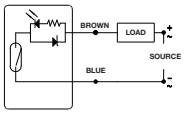	10 ... 30	100	SPST	-10 … +70	•	IP 67	1	PVC 2 x 0,5	30	M/70/LSU/1V

*Please contact our technical service for other cable length options.

Warning

These products are intended for use in industrial compressed air systems only. Do not use these products where pressures and temperatures can exceed those listed under »**Technical features/data**«.
Before using these products with fluids other than those specified, for non-industrial applications, life-support systems or other applications not within published specifications, consult
IMI Precision Engineering, Norgren Ltd.

Through misuse, age, or malfunction, components used in fluid power systems can fail in various modes. The system designer is warned to consider the failure modes of all component parts used in fluid power systems and to provide adequate safeguards to prevent personal injury or damage to equipment in the event of such failure.
System designers must provide a warning to end users in the system instructional manual if protection against a failure mode cannot be adequately provided.
System designers and end users are cautioned to review specific warnings found in instruction sheets packed and shipped with these products.

Our policy is one of continued research and development. We therefore reserve the right to amend, without notice, the specifications given in this document. (2016 - 9163c) © 2015 Norgren Co. Ltd.