Series 07 General Purpose Filter/Regulator 1/8″ and 1/4″ Port Sizes

- **Compact design**
- **Full flow gauge ports**
- **Low torque, non-rising adjusting knob**
- **Snap action knob locks pressure setting when pushed in**
- **Standard relieving models allow reduction of outlet pressure even when the system is dead-ended**
- **Protects air operated devices by removing liquid and solids contaminants**
- **Screw-on bowl reduces maintenance time**
- **Can be disassembled without the use of tools or removal from the air line**



Ordering Information. Models listed include PTF threads, transparent bowl, relieving diaphragm, gauge, automatic drain, 5 µm element, 5 to 100 psig (0.3 to 7 bar) outlet pressure adjustment range* .

Port Size	Model Number	Flow† scfm (dm^3/s)	Weight lbs (kg)
1/8"	B07-102-A1KA	13 (6.2 dm^3/s)	0.57 (0.26)
1/4"	B07-202-A1KA	14 (6.5 dm^3/s)	0.57 (0.26)

* Outlet pressure can be adjusted to pressures in excess of, and less than, those specified. Do not use these units to control pressures outside of the specified ranges.

† Typical flow with 100 psig (7 bar) inlet pressure, 90 psig (6.3 bar) set pressure and a 15 psig (1 bar) droop from set.

Alternative Models

B 0 7 - ★ ★ ★ - ★ ★ ★ ★

Port Size	Substitute
1/8″	1
1/4″	2

Bowl	Relief Type	Gauge	Substitute
Transparent	Relieving	Without	01
Transparent	Relieving	With	02
Transparent	Non-relieving	Without	03
Transparent	Non-relieving	With	23
Metal	Relieving	Without	33
Metal	Relieving	With	34
Metal	Non-relieving	Without	35
Metal	Non-relieving	With	36

Threads	Substitute
PTF	A
ISO Rc taper	B
ISO G parallel	G

Outlet Pressure Adjustment Ranges*	Substitute
1 to 10 psig (0.1 to 0.7 bar)	A
5 to 50 psig (0.3 to 3.5 bar)	E
5 to 100 psig (0.3 to 7 bar)	K
5 to 125 psig (0.3 to 8.6 bar)	L

Element	Substitute
5 µm	1

Drain	Substitute
Automatic	A
Manual	M

ISO Symbols

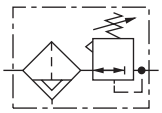

Automatic Drain
Relieving

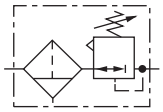

Manual Drain
Relieving

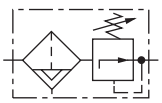

Automatic Drain
Non Relieving

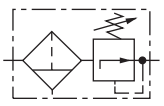

Manual Drain
Non Relieving

See Section ALE-24 for Accessories

Technical Data

Fluid: Compressed air
Maximum pressure
- Transparent bowl: 150 psig (10 bar)
- Metal bowl: 250 psig (17 bar)

Operating temperature*
- Transparent bowl: 30° to 125°F (-34° to 50°C)
- Metal bowl: -30° to 150°F (-34° to 65°C)

* Air supply must be dry enough to avoid ice formation at temperatures below 35°F (2°C)

Particle removal: 5 µm or 40 µm filter element
Air quality: Within ISO 8573-1, Class 3 and Class 5 (particulates)
Typical flow at 100 psig (7 bar) inlet pressure, 90 psig (6.3 bar) set pressure and a droop of 15 psig (1 bar) from set
- 1/8" Ports: 13 scfm (6.2 dm^3/s) with 5 µm element
- 1/4" Ports: 14 scfm (6.5 dm^3/s) with 5 µm element

Nominal bowl size: 1 fluid ounce (31 ml)
Gauge ports:
- 1/8" PTF with PTF main ports
- 1/8" ISO Rc with ISO Rc main ports
- 1/8" ISO Rc with ISO G main ports

Drain connection: Will fit 1/8-27 and 1/8-28 pipe thread
Automatic drain operation: Spitter type drain operates momentarily when a rapid change in air flow occurs or when the supply pressure is reduced.
Materials:
- Body: Zinc
- Bonnet: Acetal
- Valve: Brass/nitrile
- Valve seat: Acetal
- Bowl
  - Transparent: Polycarbonate
  - Metal: Zinc
- Element: Sintered polypropylene
- Elastomers: Nitrile

Typical Performance Characteristics

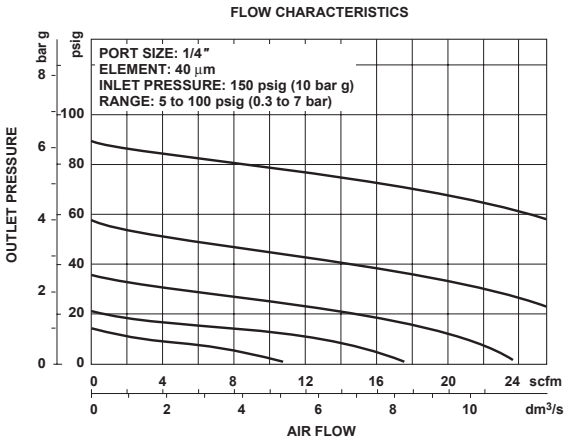

Service Kits

Item	Type	Part number
Service kit	Relieving models, 5 µm element	3820-12
	Non relieving models, 5 µm element	3820-11
Replacement drains	Manual	773-03
	Automatic	3654-02

Service kit includes slip ring, diaphragm, valve seat with o-ring, valve, valve spring, element, element gasket, and bowl o-ring.

All Dimensions in Inches (mm)

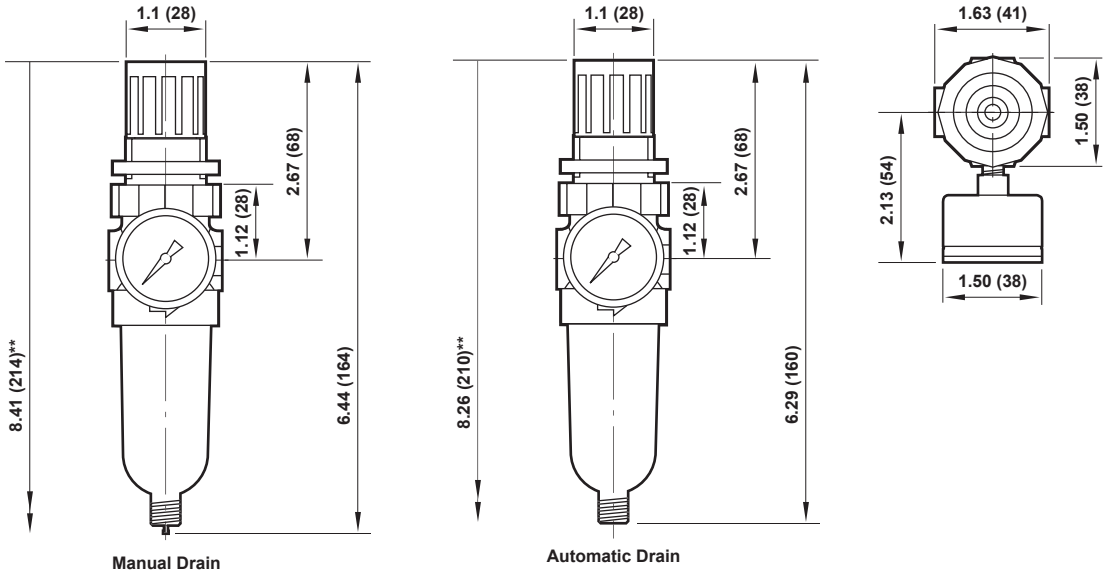

** Minimum clearance to remove bowl
Panel mounting hole diameter 1.19″ (30 mm)
Panel thickness: 0.25″ (6 mm)