END-OF-ARM TOOLING

IMI Norgren offers a complete range of easy to assemble, modular end-of-arm tooling components and fully configured solutions.

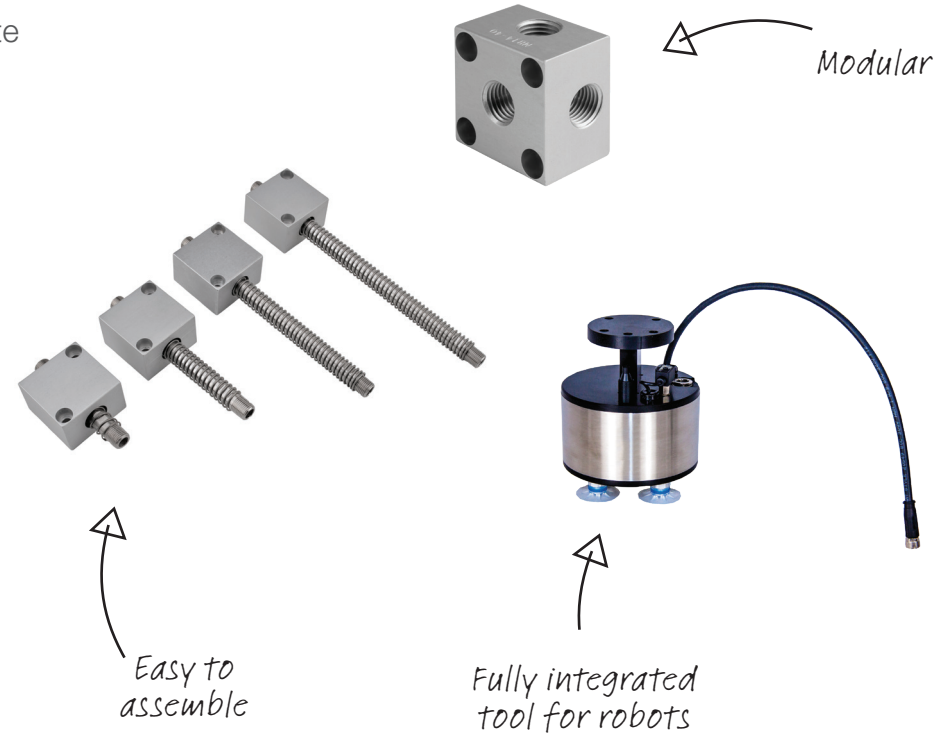

Fast Find Guide

Please note: These products represent only part of the IMI Precision Engineering vacuum range. If you can't see the option you require please contact us.

End-of-Arm Tooling

NCRVT Fully integrated vacuum tool designed for collaborative robots Page 225	**Spring Levelers** Mechanical compensation for uneven surfaces Page 227	**Mounting Brackets** To connect spring levelers to vacuum generators Page 242	**Manifold Blocks** For mounting vacuum cups to extrusions and/or distributing vacuum to multiple locations Page 247

IMI Precision Engineering
For further information, visit www.imi-precision.com and use the new improved search function. If you cannot see the option you require please contact us.
IMI NORGREN

NCRVT

- Plug and play operation: Just simply add air
- Mounting plate is designed for specific robot brand
- Adjustable vacuum switch for part detection
- Pre-installed muffler for quiet operation
- Integrated valve simplifies installation
- Mounting hardware included

Technical Data

Stocked configurations:
NCRVTU-150M-P-C** for semi-porous applications
NCRVTU-100H-P-C** for non-porous applications
Consult factory for assistance choosing the correct vacuum characteristics for your applications

Standard vacuum ports:
(1) 1/4" NPT female
(4) 1/8" NPT female
Consult factory for custom options

Option selector

NCRVTU-★★★★-★-C★★

Series	Substitute
NCRVT (Norgren Collaborative Robot Vacuum Tool)	

Robot Type	Substitute
Universal Robots	U

Vacuum Flow Level	Substitute
Venturi Cartridge 60	060
Venturi Cartridge 90	090
Venturi Cartridge 100	100
Venturi Cartridge 150	150

Vacuum Level	Substitute
10"Hg @ 80PSI (Standard)	L
20"Hg @ 80PSI (Standard)	M
28"Hg @ 80PSI (Standard)	H
10"Hg @ 60PSI	X
20"Hg @ 60PSI	Y
28"Hg @ 60PSI	Z

Cup Configuration	Substitute
No Cups	C01
Single cup, dual durometer, polyurethane, single bellows	C02
Quad cup, dual durometer, polyurethane, single bellows	C03
Single cup, silicone, flat	C04
Quad cup, silicone, flat	C05

Switch / Sensor	Substitute
Switch (PNP)	P
Sensor (1-5V DC outlet)	S

Dimensions inches (mm)

Vacuum Port Layout

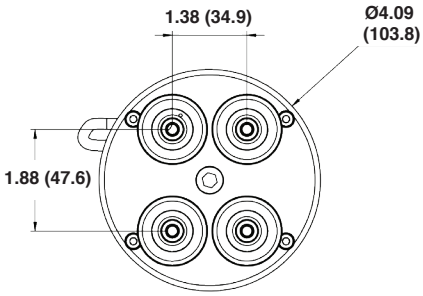

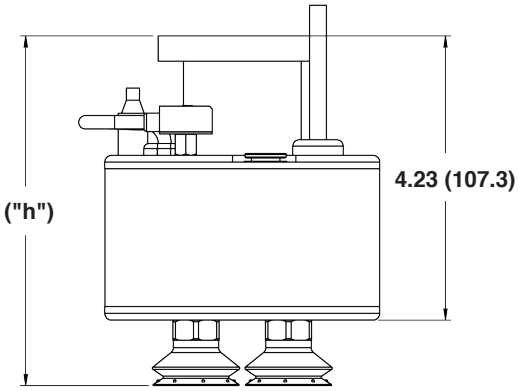

	Height "h" (mm)	Weight lb (kg)
C01	4.23 (107.30)	1.90 (0.86)
C02	5.67 (144.10)	2.00 (0.91)
C03	5.20 (132.00)	2.10 (0.95)
C04	5.78 (146.80)	2.10 (0.95)
C05	4.92 (125.00)	2.00 (0.91)

NCRVT

Operating Ranges

Temperature ranges for normal operation of end effector.

Cup	Working temperature
C01	14˚ F to 140˚ F (-10˚ C to 60˚ C)
C02	50˚ F to 122˚ F (10˚ C to 50˚ C)
C03	50˚ F to 122˚ F (10˚ C to 50˚ C)
C04	14˚ F to 140˚ F (-10˚ C to 60˚ C)
C05	14˚ F to 140˚ F (-10˚ C to 60˚ C)

Performance Data

Air consumption (scfm [slpm])	L 10" Hg (339 mbar)	M 20" Hg (677 mbar)	H 28" Hg (948 mbar)
060	N/A	0.50 (14.20)	0.80 (22.60)
090	0.50 (14.20)	1.40 (39.60)	1.80 (51.00)
100	1.40 (39.60)	1.80 (51.00)	2.80 (79.30)
150	1.80 (51.00)	2.80 (79.30)	4.80 (135.90)

Approximate time to reach full vacuum (seconds)5	L 10" Hg (339 mbar)	M 20" Hg (677 mbar)	H 28" Hg (948 mbar)
060	N/A	1.2	4.2
090	0.2	0.6	1.5
100	0.1	0.3	1.3
150	0.1	0.3	0.7

Maximum recommended load (lb [kg])1	L 10" Hg (339 mbar)	M 20" Hg (677 mbar)	H 28" Hg (948 mbar)
C02	3.90 (1.80)	7.90 (3.60)[2]	11.00 (5.00)[3]
C03	5.50 (2.50)[2]	10.90 (4.90)[3]	15.30 (6.90)[3]
C04	8.50 (3.90)[2]	17.10 (7.80)[3]	23.90 (10.80)[4]
C05	4.80 (2.20)[2]	9.50 (4.30)[3]	13.30 (6.00)[3]

NOTES:

1 4X factor of safety applied

2 Exceeds load capacity of UR 3
3 Exceeds load capacity of UR 5
4 Exceeds load capacity of UR 10
5 Actual time will vary based on cup selection, leakage and part shape

6 Average performance data shown. All data is for reference only. Please contact factory for assistance with your application

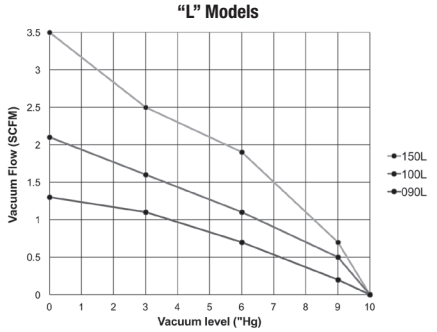

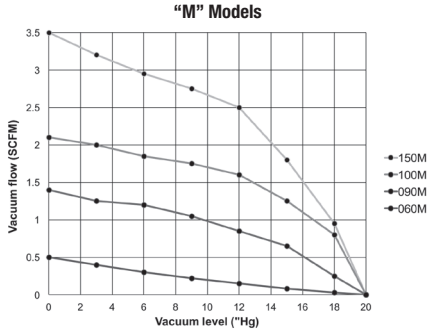

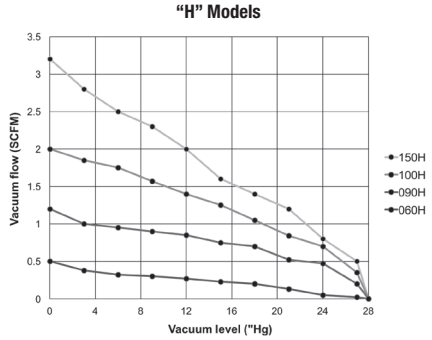

SPRING LEVELERS

- Spring Levelers allow compliance for end-of-arm tools to ensure that all cups make contact. This is especially important when handling large objects such as sheets of plywood that may be warped and the tool has multiple vacuum cups that must make contact.
- Smooth operation – reduces shock to an object that is being lifted
- Lightweight – reduces stress to robotic end effectors
- High flow – maximize performance and holding force for porous objects
- Flexible mounting options for robotic end effectors / EOAT
- Reduces machine indexing when picking up material from a stack

Spring Levelers: Groups 1, 2, & 3 – NVSL1, NVSL2 & NVSL3

Part Number	A in. (mm)	B-Travel in. (mm)	C in. (mm)	D in. (mm)	E in. (mm)	F-Thread in. (mm)	H in. (mm)	J in. (mm)	Thickness in. (mm)	Weight oz (g)
NVSL1-20 **NVSL1M-20**	1.14 (29.00)	0.20 (5.10)	10-32 F (M5 F)				0.19 (4.80)			1.70 (48)
NVSL1-40 **NVSL1M-40**	1.54 (39.10)	0.40 (10.20)	10-32 F (M5 F)	0.15 (19.00)	0.75 (19.00)	1/2-20 UNF	0.39 (9.90)	0.75 (19.10)	0.43 (10.90)	1.80 (51)
NVSL1-80 **NVSL1M-80**	2.32 (58.90)	0.80 (20.30)	10-32 F (M5 F)				0.77 (19.60)			1.90 (54)
NVSL1-120 **NVSL1M-120**	3.11 (79.00)	1.20 (30.50)	10-32 F (M5 F)				1.16 (29.50)			2.10 (60)
NVSL2-40 **NVSL2M-40**	2.70 (68.60)	0.40 (10.10)	1/8 NPTM (G1/8 M)				0.80 (20.30)			2.6 oz (74)
NVSL2-120 **NVSL2M-120**	4.27 (108.50)	1.20 (30.50)	1/8 NPTM (G1/8 M)	0.24 (28.00)	0.88 (22.20)	5/8-18 UNF	1.57 (39.90)	1.10 (27.90)	0.72 (18.30)	3.20 (91)
NVSL2-200 **NVSL2M-200**	5.83 (148.10)	2.00 (50.80)	1/8 NPTM (G1/8 M)				2.33 (59.20)			4.00 (113)
NVSL2-280 **NVSL2M-280**	7.41 (188.20)	2.80 (71.10)	1/8 NPTM (G1/8 M)				3.11 (79.00)			4.60 (130)
NVSL3-120	4.27 (108.50)	1.20 (30.50)					1.17 (29.70)			5.90 (117)
NVSL3-200	5.83 (148.10)	2.00 (50.80)		0.31 (7.90)	1.13 (28.60)		1.93 (49.00)	1.50 (38.10)	1.02 (25.90)	7.3 oz (207)
NVSL3-280	7.41 (188.20)	2.80 (71.10)	1/4 NPTM			7/8-14 UNF	2.71 (68.80)			8.70 (247)
NVSL3-360	9.00 (228.60)	3.60 (91.40)					3.50 (88.90			10.10 (286)

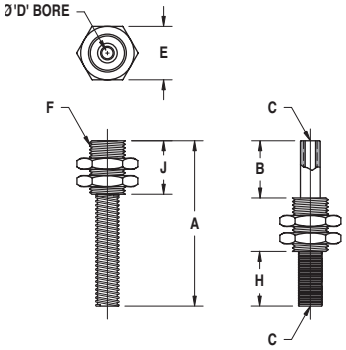

Spring Leveler Group 1

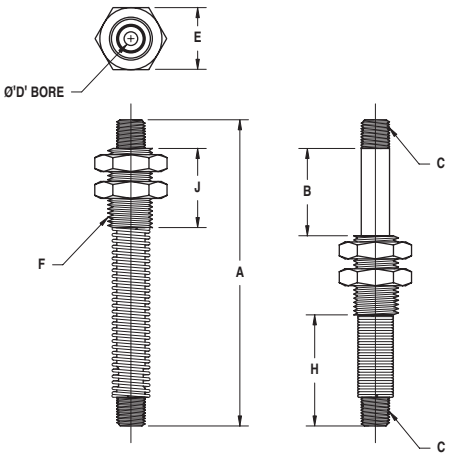

Spring Leveler Groups 2 & 3

IMI NORGREN
For further information, visit www.imi-precision.com and use the new improved search function. If you cannot see the option you require please contact us.
IMI Precision Engineering

Custom Vacuum Spring Levelers - NVSL Series

Ideal for OEM engineers and designers

- Creative Engineering
- Precision Manufacturing
- Extensive Application Experience

When off the shelf doesn't work, IMI Norgren's engineering expertise and manufacturing capabilities can provide custom solutions to your specifications.

Whether it's as simple as modifying a standard product, or more complex requiring new products with precise tolerances, or special materials, IMI Norgren has the solution.

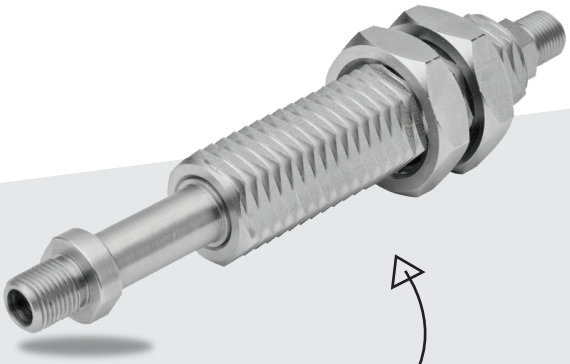

Our custom made 303 stainless steel spring leveler, vacuum cup and generator assembly attaches to swivel arm (not shown) for carton erecting application in food industry.

NVP1X-100H vacuum generator with pneumatic blow-off with stainless steel spring leveler.

Light Duty Spring Leveler Mounting Brackets

NSLBS Series – Mounting brackets for 1" [25mm] extrusions

NSLBF Series – Mounting brackets for 1.5" [40mm] extrusions

Ideal applications

- End-of-arm-Tooling
- Robotic assembly
- Electronics
- Pick & place
- Injection Molding – parts removal

Features and benefits

- Simple to assemble, modular
- End-of-Arm Tooling component
- Lightweight – Reduces stress to robotic end effector
- Flexible mounting – Top, sides or bottom of extrusions
- Easily adjusted and repositioned in seconds

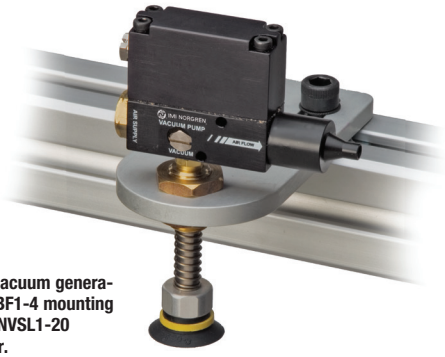

NVP0X-60H vacuum generator with NSLBF1-4 mounting bracket and NVSL1-20 spring leveler.

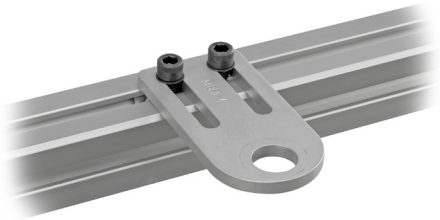

Quick change brackets for flexible mounting positions

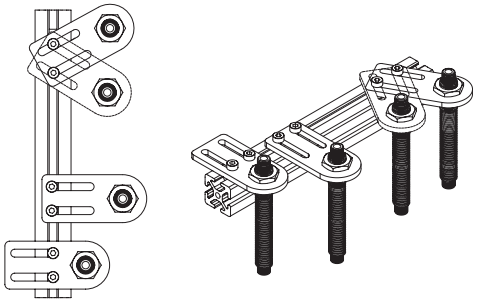

Flexible mounting positions

Designed for flexible manufacturing operations, NSLBF and NSLBS Series mounting brackets attach to the top, sides or bottom of 1" [25mm] and 1.5" [40mm] extrusions.

Easily mounted and adjusted, the Light Duty Spring Leveler Brackets readily rotate, slide or pivot for accurate part alignment. If the part size or process should change, you can re-position the brackets in a matter of seconds.

Using your extrusions or ours, NSLBF and NSLBS Series mounting brackets connect to our NVSL Series Spring Levelers (see page 12.7) and a variety of our venturi vacuum generators to create a simple, off-the-shelf End-of-Arm device.

Standard Spring Leveler Brackets:

- 3 Series: Fits NVSL1, 2, 3 spring levelers
- 4 Sizes: 2", 3", 4" and 5" lengths
- Anodized aluminum

Spring Leveler Bracket Options:

- Spring levelers, vacuum cups and vacuum fittings
- Swivel attachment – Available for Series 3 only
- Mounting hardware: 1/4" (6.5mm) T-slot compatible or 5/16" (10mm) T-slot compatible

Light Duty Spring Leveler Mounting Bracket Assemblies:

(IMI Norgren-supplied or customer-supplied extrusions)

NSLBS Series
1" [25mm] extrusion,
1/4" [6.5mm] T-slot compatible

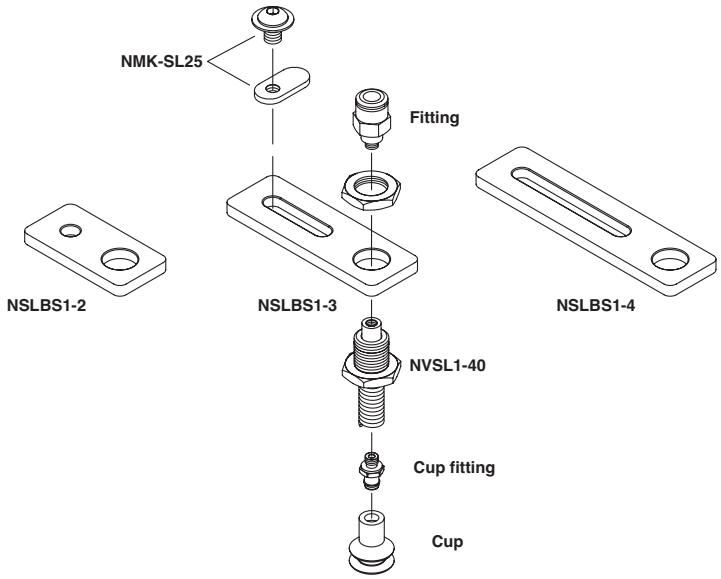

NSLBF Series
1.5" [40mm] extrusion,
5/16" [10mm] T-slot compatible

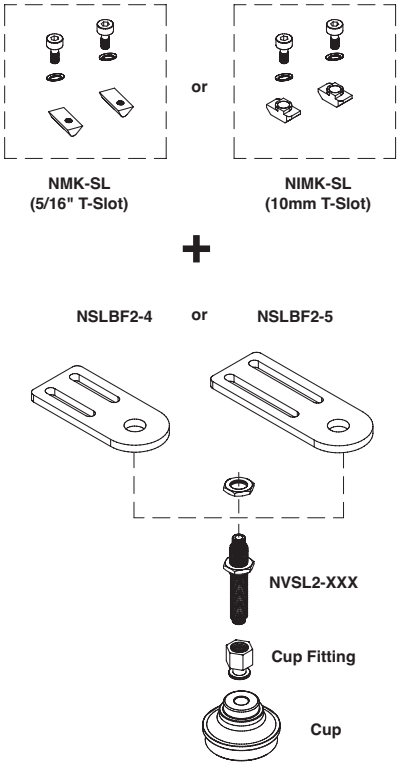

How to specify

Bracket Model Number	Size in (mm)	For use with IMI Norgren Spring Levelers
NSLBS1-2	2.00 (50.00)	NVSL1/I-NVSL1-(20, 40, 80, 120)
NSLBS1-3	3.00 (76.20)	NVSL1/I-NVSL1-(20, 40, 80, 120)
NSLBS1-4	4.00 (101.60)	NVSL1/I-NVSL1-(20, 40, 80, 120)
NSLBF1-4	4.00 (101.60)	NVSL1/I-NVSL1-(20, 40, 80, 120)
NSLBF1-5	5.00 (127.00)	NVSL1/I-NVSL1-(20, 40, 80, 120)
NSLBS2-2	2.00 (50.80)	NVSL2/I-NVSL2-(40, 120, 200, 280)
NSLBS2-3	3.00 (76.20)	NVSL2 I-NVSL2-(40, 120, 200, 280)
NSLBS2-4	4.00 (101.60)	NVSL2 I-NVSL2-(40, 120, 200, 280)
NSLBF2-4	4.00 (101.60)	NVSL2 I-NVSL2-(40, 120, 200, 280)
NSLBF2-5	5.00 (127.00)	NVSL2 I-NVSL2-(40, 120, 200, 280)
NSLBF3-4	4.00 (101.60)	NVSL3 I-NVSL3-(120, 200, 280, 360)
NSLBF3-5	5.00 (127.00)	NVSL3 I-NVSL3-(120, 200, 280, 360)
NMK-SL25	N/A	Mounting hardware – 1/4" T-slot
NMK-SL	N/A	Mounting hardware – 5/16" T-slot
NIMK-SL	N/A	Mounting hardware – 10mm T-slot

Helpful hints:

1. Choose cup size/style based on part size and weight.
2. Choose spring leveler based on stroke length and bore size.
3. Choose bracket based on reach requirement 2", 3", 4" or 5".
4. Choose cup fitting based on thread size that matches spring leveler thread size (10-32F, 1/8 NPTM, 1/4 NPTM).

Please order Spring Level Brackets as separate line item(s) based on part number i.e. NSLBF1-4

Please order Spring Levelers as separate line item(s) based on part number i.e. NVSL1-20.

Please order Mounting Hardware as separate line item(s) based on part number i.e. NMK-SL

If you would like parts factory assembled, please specify on order "factory assembled."

Light Duty Spring Leveler Brackets – Series NSLBS Series

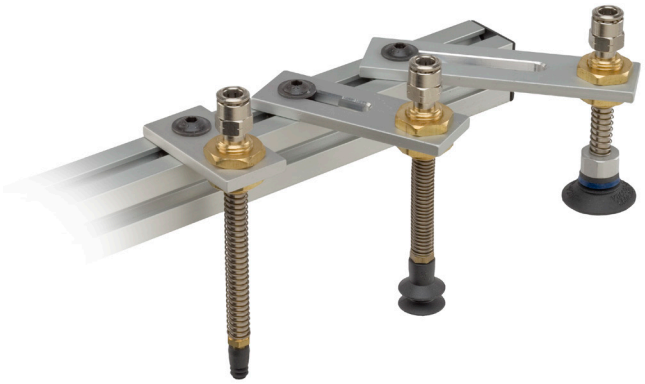

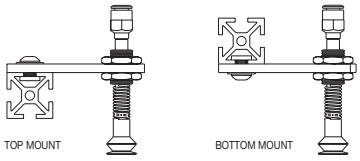

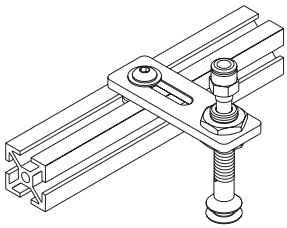

Flexible mounting positions

NSLBS1- (2, 3, 4) with hardware

NSLBS2- (2, 3, 4) with hardware

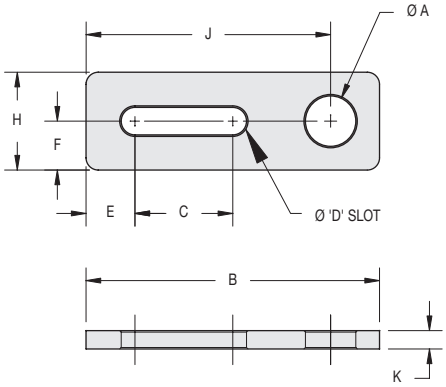

Dimensions

Part Number	A-Diameter in. (mm)	B in. (mm)	C in. (mm)	D in. (mm)	E in. (mm)	F in. (mm)	H in. (mm)	J in. (mm)	K in. (mm)	Weight oz (g)
NSLBS1-2	0.51 (13.00)	2.00 (50.80)	0.28 (7.10)	0.28 (7.10)	0.50 (12.70)	0.50 (12.70)	1.00 (25.40)	1.50 (38.10)	0.19 (4.80)	0.50 (14.20)
NSLBS1-3		3.00 (76.20)	1.00 (25.40)					2.50 (63.50)		0.80 (22.70)
NSLBS1-4		4.00 (101.60)	2.00 (50.80)					3.50 (88.90)		0.90 (25.50)
NSLBS2-2	0.64 (16.30)	2.00 (50.80)	0.28 (7.10)					1.50 (38.10)		0.50 (14.20)
NSLBS2-3		3.00 (76.20)	1.00 (25.40)					2.50 (63.50)		0.80 (22.70)
NSLBS2-4		4.00 (101.60)	2.00 (50.80)					3.50 (88.90)		0.90 (25.50)

Online at www.imi-precision.com

Light Duty Spring Leveler Brackets – Series NSLBF Series

NSLBF2- (4, 5)

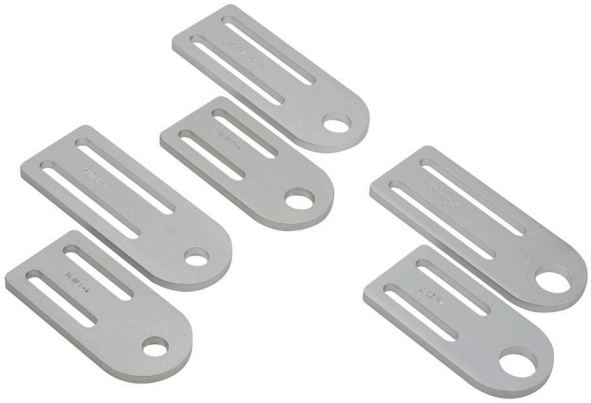

NSLBF1- (4, 5)

NSLBF3- (4, 5)

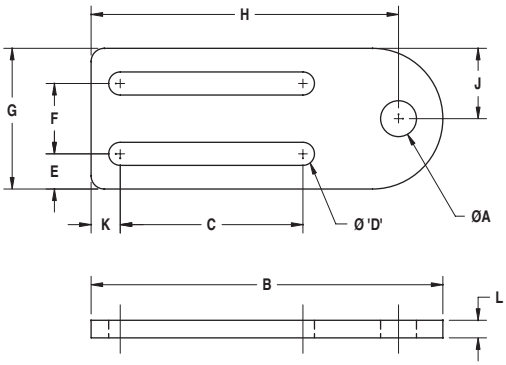

Dimensions

Part Number	A-Diameter in. (mm)	B in. (mm)	C in. (mm)	D in. (mm)	E in. (mm)	F in. (mm)	G in. (mm)	H in. (mm)	J in. (mm)	K in. (mm)	L in. (mm)	Weight oz (g)
NSLBF1-4	0.51 (13.00)	4.00 (101.60)	1.60 (40.60)					3.37 85.6				2.80 (79.40)
NSLBF1-5	0.51 (13.00)	5.00 (127.00)	2.60 (66.00)					4.37 111.0				2.90 (82.20)
NSLBF2-4	0.64 (16.30)	4.00 (101.60)	1.60 (40.60)					3.37 85.6				2.80 (79.40)
NSLBF2-5	0.64 (16.30)	5.00 (127.00)	2.60 (66.00)	0.33 (8.30)	0.50 (12.70)	1.00 (25.40)	2 .00 (50.80)	4.37 111.0	1.00 (25.40)	0.41 (10.40)	0.25 (6.40)	2.80 (79.40)
NSLBF3-4	0.89 (22.60)	4.00 (101.60)	1.60 (40.60)					3.37 85.6				2.30 (65.20)
NSLBF3-5	0.89 (22.60)	5.00 (127.00)	2.60 (66.00)					4.37 (111.00)				2.80 (79.40)

Heavy Duty Spring Levelers/Level Compensators

Ideal applications

- End-of-Arm Tooling
- Press load and unload
- automotive automation
- Robotic assembly
- Pick & place
- Sheet feeding
- Stamping press transfer

Features and benefits

- Easy to assemble, modular End-of-Arm Tooling components – Minimal design time required
- Durable – Rigid mounting design for heavy, high impact loads
- Smooth operation – Reduces shock to an object that is being lifted
- Lightweight – To maximize robot payload and increase robot speed
- High flow – Maximize performance and holding force for handling porous objects
- Flexible mounting options facilitates
- End-of-Arm Tooling tool design

NSLB40 (2, 3)
Mounting brackets compatible with 1.50" (40 mm) extrusions, 5/16" (10 mm) T-slot

Heavy Duty Spring Levelers lift parts from different horizontal levels or uneven surfaces.

When handling sensitive objects such as fruit, IMI Norgren Spring Levelers feature a soft touch allowing compliance for end-of-arm tools to ensure that all cups make contact. This is especially important when handling large objects such as sheets of plywood that may be warped and the tool has multiple vacuum cups that must make contact.

IMI Norgren's Spring Leveler design surpasses the competition. We offer large thru-bores that allow higher vacuum flow to overcome leakage and for rapid evacuation to ensure safe handling operations

For design flexibility, IMI Norgren offers a large range of sizes and travel lengths 0.20" (5 mm) to 3.6" (91 mm) to accommodate the necessary over-driving by the lifting mechanism to bring all cups in contact.

Recommended for applications which require lifting heavy loads without deflection, IMI Norgren Heavy Duty Spring Levelers include a rigid mounting bracket for a strong, solid connection to 1.50" (40 mm) extrusions.

Standard Spring Levelers:

- **2 Series:** 1/8" and 1/4" NPT male thread
- **8 Models:** Travel lengths from 0.40" to 3.60" (10 mm to 91 mm)
- Nickel plated steel shafts, stainless steel springs, high performance bearings and aluminum body

Spring Leveler Options:

- Vacuum cups and vacuum fittings
- Swivel attachment – Available for Series 3 only

Heavy Duty Spring Leveler Mounting Assembly

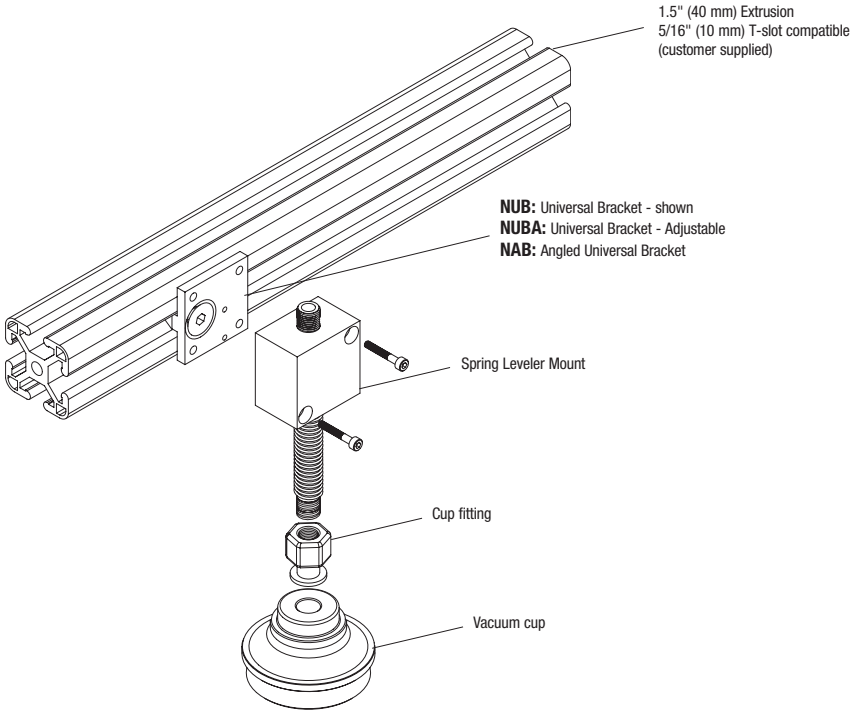

How to specify

Part Number	Heavy Duty Spring Leveler Mounting Assembly
Series 2	
NSLB40/NSLB40M-2-40	0.40" (10.16 mm) travel, 1/8 NPT male thread
NSLB40/NSLB40M-2-120	1.20" (30.48 mm) travel, 1/8 NPT male thread
NSLB40/NSLB40M-2-200	2.00" (50.80 mm) travel, 1/8 NPT male thread
NSLB40/NSLB40M-2-280	2.80" (71.12 mm) travel, 1/8 NPT male thread
Series 3	
NSLB40/NSLB40M-3-120	1.20" (10.16 mm) travel, 1/4 NPT male thread
NSLB40/NSLB40M-3-200	2.00" (30.48 mm) travel, 1/4 NPT male thread
NSLB40/NSLB40M-3-280	2.80" (50.80 mm) travel, 1/4 NPT male thread
NSLB40/NSLB40M-3-360	3.60" (71.12 mm) travel, 1/4 NPT male thread

When ordering spring levelers check the "B" dimension for travel range.

Please order spring levelers as separate line items based on part number i.e. NSLB40-2-40

If you would like parts factory assembled, please specify on order "factory assembled."

To attach Heavy Duty Spring Levelers to extrusions, please see Universal Bracket mounting options.

Heavy Duty Spring Levelers – Series NSLB40-2, NSLB40-3

Part Number Series 2	Dimension A in. (mm)	B-Travel in. (mm)	C in. (mm)	D in. (mm)	E in. (mm)	F in. (mm)	H in. (mm)	J, L in. (mm)	K, M in. (mm)	Weight oz (g)
NSLB40-2-40 **NSLB40M-2-40**	2.70 (68.60)	0.40 (10.20)	1/8 NPTM (G1/8 M)				0.40 (10.20)			4.70 (133.20)
NSLB40-2-120 **NSLB40M-2-120**	4.27 (108.50)	1.20 (30.50)	1/8 NPTM (G1/8 M)				1.17 (29.70)			4.70 (133.20)
NSLB40-2-200 **NSLB40M-2-200**	5.83 (148.10)	2.00 (50.80)	1/8 NPTM (G1/8 M)	0.24 (6.10)	0.21 (5.20)	1.00 (25.40)	1.93 (49.00)	1.10 (27.90)	1.50 (38.10)	5.30 (150.30)
NSLB40-2-280 **NSLB40M-2-280**	7.41 (188.20)	2.80 (71.10)	1/8 NPTM (G1/8 M)				2.71 (68.80)			5.9 oz (167.30)

Part Number Series 3	Dimension A	B-Travel in. (mm)	C in. (mm)	D in. (mm)	E in. (mm)	F in. (mm)	H in. (mm)	J, L in. (mm)	K, M in. (mm)	Weight oz (g)
NSLB40-3-120 **NSLB40M-3-120**	4.27 (108.50)	1.20 (30.50)	1/4 NPTM (G1/4 M)				1.17 (29.70)			6.90 (195.60)
NSLB40-3-200 **NSLB40M-3-200**	5.83 (148.10)	2.00 (50.80)	1/4 NPTM (G1/4 M)				1.93 (49.00)			7.90 (224.00)
NSLB40-3-280 **NSLB40M-3-280**	7.41 (188.20)	2.80 (71.10)	1/4 NPTM (G1/4 M)	0.31 (7.90)	0.21 (5.20)	1.00 (25.40)	2.71 (68.80)	1.10 (27.90)	1.50 (38.10)	9.90 (280.70)
NSLB40-3-360 **NSLB40M-3-360**	9.00 (228.60)	3.60 (91.40)	1/4 NPTM (G1/4 M)				3.49 988.60)			11.00 (311.80)

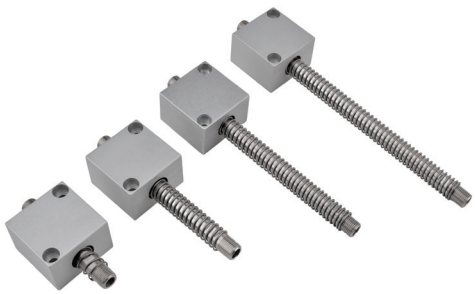

Series 2
NSLB40-2 (40, 120, 200, 280)

Series 3
NSLB40-3 (120, 200, 280, 360)

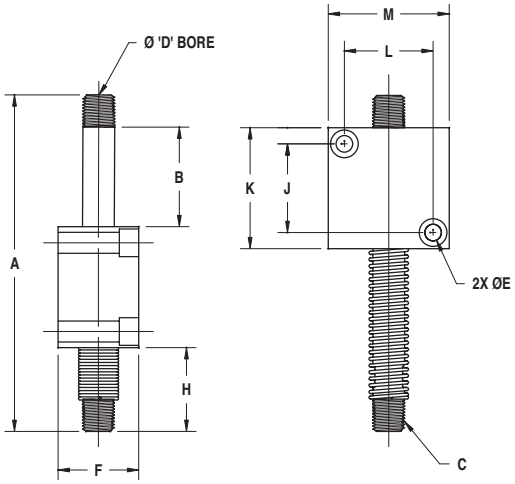

Online at www.imi-precision.com

Adjustable, Fixed Extension Shaft & Mounting Brackets

Ideal applications

- Injection molding
- Pick & place of irregular shaped parts with large surface height differences

Features and benefits

- Easy to assemble, modular End-of-Arm tool components – minimal design time required
- Fixed positioning for consistent indexing and part retention
- Rigid mounting design for heavy, high impact loads
- Smooth operation – reduces shock to an object that is being lifted
- Lightweight – to maximize robot payload and increase robot speed
- High flow – maximize performance and holding force for handling porous objects
- Flexible mounting options facilitates
- End-of-Arm tool design

NFEB40 (2, 3) -
Mounting brackets compatible with 1.5" (40 mm) extrusions, 5/16" (10 mm) T-slot

NFEB40-3 with bellows Vacuum cup.

Adjustable, Fixed Extension Shaft & Bracket is a rigid, non-moving rod that mounts to the top, sides or bottom of 1.5" (40 mm) extrusions. Once the shaft is adjusted to meet a specific height requirement, the bracket is clamped into a fixed position.

Designed for flexible manufacturing operations, the NFEB40 Series is easily repositioned by simply loosening 2 collar screws and sliding the shaft up or down to meet the new height requirements. For added adjustability, add an adjustable universal bracket to slide the NFEB40 left or right.

Standard Adjustable, Fixed Extension Shaft & Bracket:

- **2 Series:** 1/8 or 1/4 NPT male
- **8 Shaft Lengths:** 0.40" to 6.7" (10 mm to 170 mm)
- **Mounting:** Split collar design
- **Material:** Nickel plated steel shafts and aluminum body

Adjustable, Fixed Extension Shaft & Bracket Options:

- Wide variety of vacuum cups and vacuum fittings
- Universal brackets for easy attachments and adjustable positioning
- Vacuum cup Swivel attachment – available for Series 3 only

Adjustable Fixed Length Extension Brackets: NFEB40- (2, 3) – Configurations and Options:

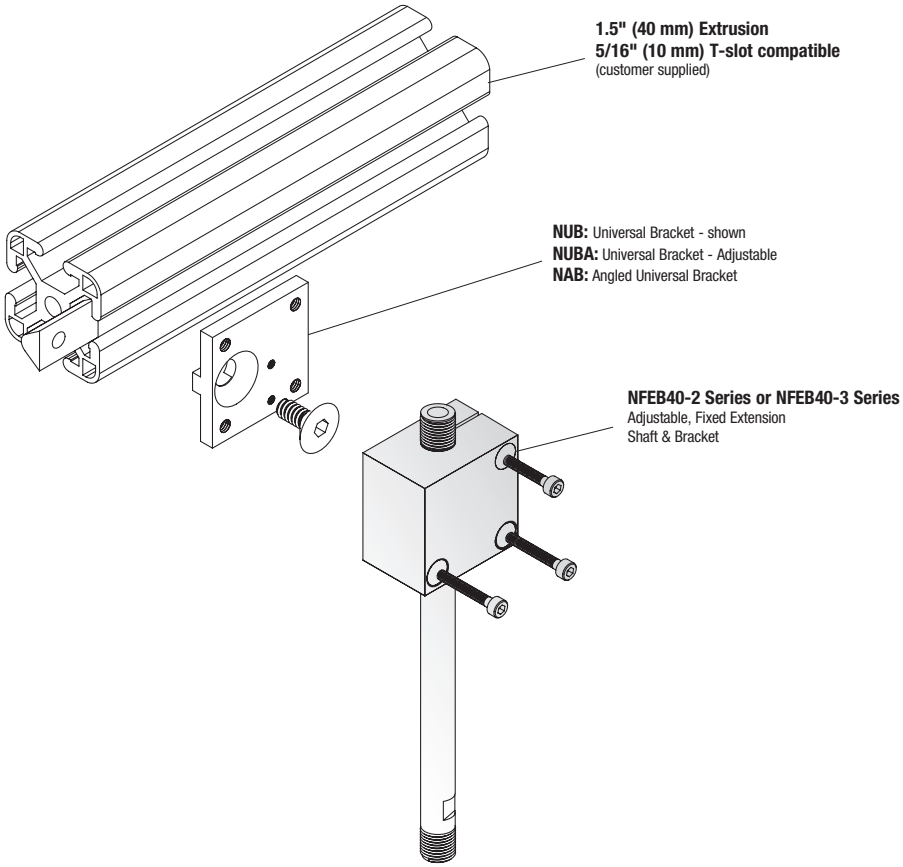

How to specify

Part Number	Adjustable, Fixed Extension Shaft & Brackets
Series 2	
NFEB40/NFEB40M-2-40	0.40" (10.16 mm) extension length, 1/8 NPT (G1/8) male
NFEB40/NFEB40M-2-120	1.97" (50.04 mm) extension length, 1/8 NPT (G1/8) male
NFEB40/NFEB40M-2-200	3.51" (89.15 mm) extension length, 1/8 NPT (G1/8) male
NFEB40/NFEB40M-2-280	5.11" (129.8 mm) extension length, 1/8 NPT (G1/8) male
Series 3	
NFEB40/NFEB40M-3-120	1.97" (50.04 mm) extension length, 1/4 NPT (G1/4) male
NFEB40/NFEB40M-3-200	3.51" (89.15 mm) extension length, 1/4 NPT (G1/4) male
NFEB40/NFEB40M-3-280	5.11" (129.80 mm) extension length, 1/4 NPT (G1/4) male
NFEB40/NFEB40M-3-360	6.70" (170.20 mm) extension length, 1/4 NPT (G1/4) male

To specify NFEB40, choose part number based on extension length desired, thru bore diameter and thread size on each end of shaft.

Please order NFEB40's as separate line items based on part number. i.e. NFEB40-2-280. To order metric threads place an "I-" in front of the part number. Example: NFEB40M-2-280.

Please order Universal brackets (NUB, NUBA or NAB) as separate line items based on part numbers.

To attach Adjustable, Fixed Extension Shafts & Brackets to extrusions, please see Universal Bracket mounting options.

Adjustable – Fixed Length Extension Shafts & Brackets

Part Number Series 2	Dimension A in. (mm)	B in. (mm)	C in. (mm)	D in. (mm)	E in. (mm)	F in. (mm)	H in. (mm)	J, L in. (mm)	K, M in. (mm)	Weight oz (g)
NFEB40-2-40 NFEB40M-2-40	2.70 (68.60)	0.40 (10.20)	1/8 NPTM (G1/8 M)				0.80 (20.30)			4.70 (133.20)
NFEB40-2-120 NFEB40M-2-120	4.27 (108.50)	1.97 (50.00)	1/8 NPTM (G1/8 M)				2.37 (60.20)			4.70 (133.20)
NFEB40-2-200 NFEB40M-2-200	5.83 (148.10)	3.51 (89.20)	1/8 NPTM (G1/8 M)	0.24 (6.10)	0.21 (5.20)	1.00 (25.40)	3.91 (99.30)	1.10 (27.90)	1.50 (38.10)	5.30 (150.30)
NFEB40-2-280 NFEB40M-2-280	7.41 (188.20)	5.11 (129.80)	1/8 NPTM (G1/8 M)				5.51 (140.00)			5.90 (167.30)

Part Number Series 3	Dimension A in. (mm)	B in. (mm)	C in. (mm)	D in. (mm)	E in. (mm)	F in. (mm)	H in. (mm)	J, L in. (mm)	K, M in. (mm)	Weight oz (g)
NFEB40-3-120 NFEB40M-3-120	4.27 (108.50)	1.97 (50.00)	1/4 NPTM (G1/4 M)				2.37 (60.20)			6.90 (195.60)
NFEB40-3-200 NFEB40M-3-200	5.83 (148.10)	3.51 (89.20)	1/4 NPTM (G1/4 M)				3.91 (99.30)			7.90 (224.00)
NFEB40-3-280 NFEB40M-3-280	7.41 (188.20)	5.11 (129.80)	1/4 NPTM (G1/4 M)	0.31 (7.90)	0.21 (5.20)	1.00 (25.40)	5.51 (140.00)	1.10 (27.90)	1.50 (38.10)	9.90 (280.70)
NFEB40-3-360 NFEB40M-3-360	9.00 (228.60)	6.70 (170.20)	1/4 NPTM (G1/4 M)				7.10 (180.30)			11.00 (311.80)

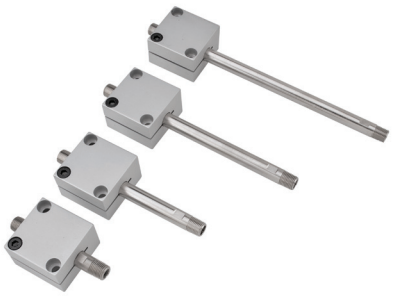

Series 2
NFEB40-2- (40, 120, 200, 280)

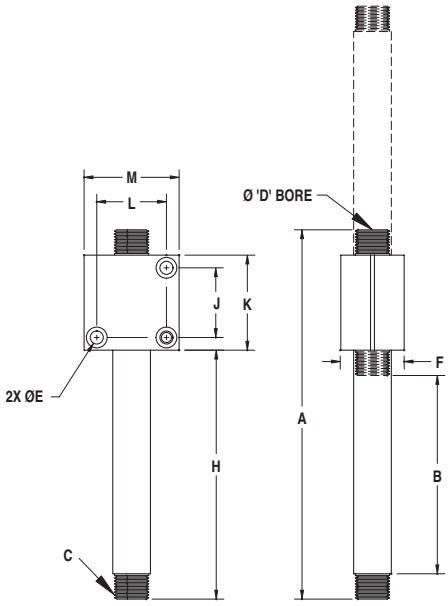

Series 3
NFEB40-3-(120, 200, 280, 360)

Vacuum Cup Locking Angle Joint

Ideal applications

- Stamping operations (press load and unload)
- Palletizing
- Handling curved and angular objects

Features and benefits

- Durable –rugged all steel design
- Full 40° angular / conical movement (20° in each direction)
- Smooth and secure operation – follows contour of object being lifted
- High flow – maximize performance and holding force for handling porous objects
- Flexible mounting options facilitates
- End-of-Arm Tooling tool design

NCSJ3 Series 3 -
Mounting brackets compatible with 1.5" (40 mm) extrusions, 5/16" (10 mm) T-slot

NCSJ3-14 Vacuum Cup Locking Angle Joint with NSLB40-3 Heavy Duty Spring Leveler & Bracket and Vacuum Cup.

NCSJ3-38

Handling curved surfaces is easy with IMI Norgren's Vacuum Cup Locking Angle Joint. The NCSJ3 angle joints attach to a spring leveler and vacuum cup providing a 40º angular / conical movement. To control the degree of swivel, simply tighten the collar nut located on top of the angle joint to restrict movement.

Developed in conjunction with IMI Norgren spring levelers, the NCSJ3 angle joint assemblies feature exceptionally large flow paths to safely handle porous objects. Depending on height and tooling requirements, Vacuum Cup Locking Angle Joints are interchangeable with the following Series 3 spring levelers:

NVSL3 – Standard spring levelers

NSLB40-3 – Heavy duty spring levelers

NFEB40-3 – Fixed extension shafts & brackets

Note: The retaining nut must be locked into position to seal.

Standard Vacuum Cup Locking Angle Joint:

- 3 Sizes: 1/4, 3/8, 1/2 NPT male threads – mates to a wide variety of vacuum cup fittings
- 1/4 NPTF top port mates to all the 1/4 NPT Series 3 levelers
- Material: Nickel plated steel, Buna-N O-ring

Vacuum Cup Locking Angle Joint Options:

- Variety of vacuum cups and vacuum fittings
- Custom designs and stainless steel construction available for food and wash-down applications. Consult factory.

Vacuum Cup Locking Angle Joint: NCSJ-3 Series:

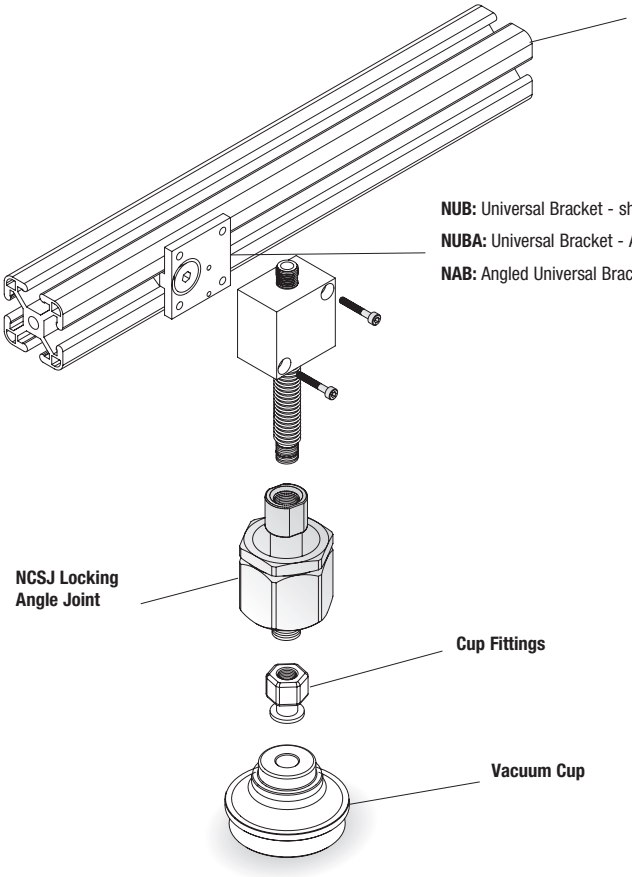

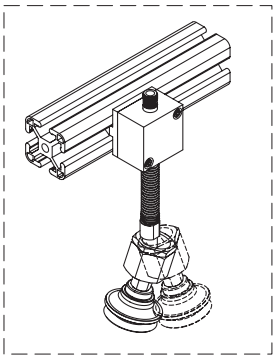

NSLB40-3 Series:
Heavy Duty
Spring Levelers

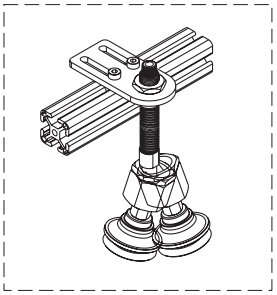

NVSL3 Series:
Spring Levelers

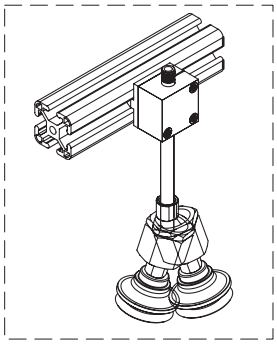

NFEB40-3 Series:
Adjustable, Fixed
Extension Shaft
& Bracket

How to specify

Part Number	Vacuum Cup Locking Angle Joint
NCSJ3-14	1/4 NPT – male thread
NCSJ3-38	3/8 NPT – male thread
NCSJ3-12	1/2 NPT – male thread

Choose the angle joint with the same NPT thread as the vacuum cup fitting.
Order by part number i.e. **NCSJ3-38**

Vacuum Cup Locking Angle Joint: Series 3 – NCSJ-3

Part Number	Dimensions A Thread in. (mm)	B Thread in. (mm)	C Thru Bore in. (mm)	D in. (mm)	E in. (mm)	F Hex in. (mm)	H Locking Angle in. (mm)	Weight oz (g)
NCSJ3-14	1/4 NPT	1/4 NPT	0.31 (7.90)	1.96 (49.80)	2.90 (73.70)	1.50 (38.10)	40°	11.70 (331.70)
NCSJ3-38	3/8 NPT			2.06 (52.30)	3.00 (76.20)			12.70 (360)
NCSJ3-12	1/2 NPT			2.06 (52.30)	3.00 (76.20)			12.70 (360)

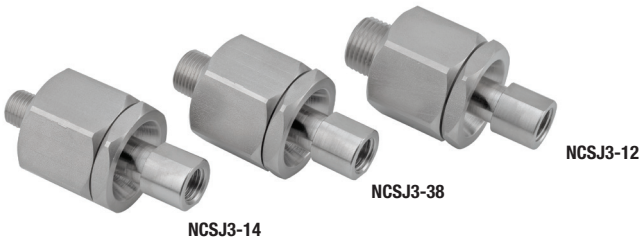

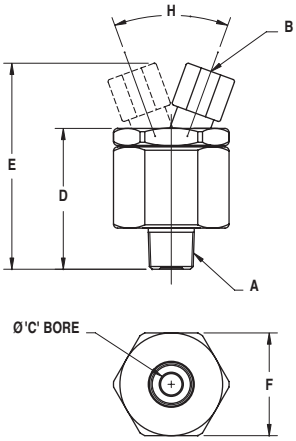

Online at www.imi-precision.com

MOUNTING BRACKETS

Universal Mounting Brackets – Standard, Adjustable, Angled

- 3 Styles – standard, adjustable or angled with simple erector-set connectivity
- Anodized aluminum – lightweight – reduces stress, extends performance and life of robot
- Modular components add design flexibility – adaptable for all EOAT configurations
- Keyed profile for tight fit – non-rotating – strong holding force
- Mounting kit includes hardware to attach products to extrusions
- Angled brackets have optional adjustment knob, consult factory

Compatible with 1" (25 mm) and 1.5" (40 mm) extrusions

Standard Universal Bracket attaches NVP10-100H to extrusion for halogen bulb pick and place operation.

Universal Bracket(Adjustable) with Vacuum cup/ Manifold block assembly.

Angled Bracket holds NVP10-60M vacuum generator and cup, with exposed fastening screw for quick and easy adjustments.

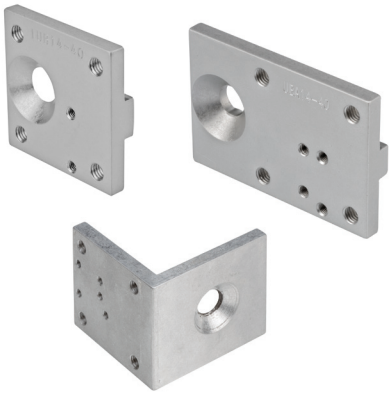

NUB, NUBA, and NAB brackets.

Universal Mounting Brackets are simple, lightweight connectors that attach IMI Norgren vacuum generators, vacuum cups, spring levelers and manifold blocks to 1" or 1.5" extrusions.

Available in 3 models, standard, adjustable or angled, our Universal Brackets are keyed to fit securely in 1/4" [6.5mm] or 5/16" [10mm] T-slots, remain square and increase holding force.

Brackets are available with or without mounting hardware.

Standard Universal Bracket: (NUB)

The standard NUB is a fixed position bracket that is tamper resistant. Once the screw is tightened to the extrusion and a product is mounted to the bracket the fastening screw is now covered and inaccessible to adjust.

Universal Bracket Adjustable: (NUBA)

An elongated version of the standard bracket, the NUBA features an exposed fastening screw that enables quick, easy bracket adjustments along the T-slot.

Angled Universal Bracket: (NAB)

For operations that require frequent adjustments, the NAB models are the easiest to re-position. One side of the bracket holds the vacuum generator, the other side of the bracket attaches to the extrusion enabling the bracket assembly to slide along the T-slot for unlimited adjustments. With the generator located on a 90º angle, the fastening screw is easily accessible at all times. Optional adjustment knobs are available for the NAB models.

IMI Precision Engineering

For further information, visit www.imi-precision.com and use the new improved search function. If you cannot see the option you require please contact us.

IMI NORGREN

Universal Brackets and Mounting Kits for 1" Extrusions

Bracket only: NUB18-25

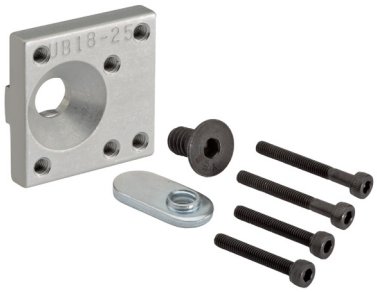

Bracket & Mounting Kit: NMK-NUB18-25

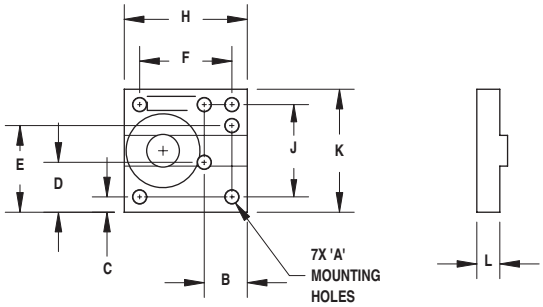

Bracket accepts: NVP00, NVP0X, NVP10 & NVP1X Series generators and NMB18-25 manifold block.

Part Number		Dimensions A- Mtg Holes	B in. (mm)	C in. (mm)	D in. (mm)	E in. (mm)	F, J in. (mm)	H, K in. (mm)	L in. (mm)	Weight oz (g)
NUB18-25	Fits 1/4 T-Slot (Fits 6.5 mm T-Slot)	M3 x 0.5	0.35 (8.90)	0.13 (3.20)	0.41 (10.30)	0.70 (17.80)	0.75 (19.10)	1.00 (25.40)	0.19 (4.70)	0.30 (8.50)

Note 1: Mounting kit includes all hardware to mount generators and manifold block.
Note 2: Depending on the generator being mounted, it may be necessary to rotate the bracket 180º from diagram shown.

Bracket only: NUB14-25

Bracket & Mounting Kit: NMK-NUB14-25

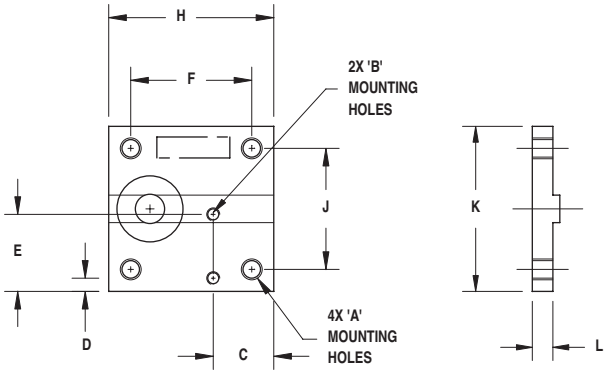

Bracket accepts all NVP Series generators except the NVP00/VP0X Series. Fits All NMB14 Series manifold blocks. (Allows larger generators to be mounted to 1" extrusions).

Part Number		Dimensions A- Mtg Holes	B- Mtg Holes	C in. (mm)	D in. (mm)	E in. (mm)	F, J in. (mm)	H, K in. (mm)	L in. (mm)	Weight oz (g)
NUB14-25	Fits 1/4 T-Slot (Fits 6.5 mm T-Slot)	10-32	M3 x 0.5	0.55 (14.00)	0.12 (3.00)	0.70 (17.80)	1.10 (27.90)	1.50 (38.10)	0.19 (4.70)	0.70 (19.80)

Note 1: Mounting kit includes all hardware to mount generators and manifold block.

How to specify

Bracket only: See Model Numbers: i.e. NUB18-25

Bracket & Mounting Kit: Add "NMK" for mounting kit in front of Model Number i.e. NMKUB18-25

Online at www.imi-precision.com

Universal Brackets (Adjustable) and Mounting Kits for 1" Extrusions

Bracket only: NUBA18-25

Bracket & Mounting Kit: NMK-NUBA18-25

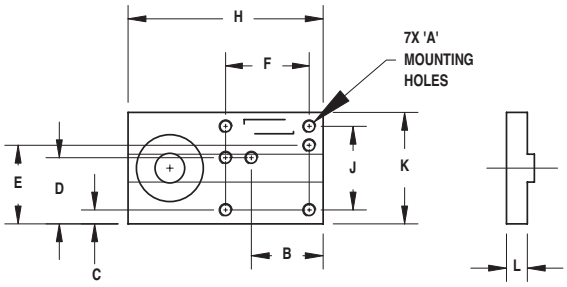

Bracket accepts: NVP00, NVP0X, NVP10 & NVP1X Series generators and NMB18-25 manifold block.

Part Number		Dimensions									Weight oz (g)
		A- Mtg Holes	B in. (mm)	C in. (mm)	D in. (mm)	E in. (mm)	F, J in. (mm)	H in. (mm)	K in. (mm)	L in. (mm)	
NUBA18-25	Fits 1/4 T-Slot (Fits 6.5mm T-Slot)	M3 x 0.5	0.64 (16.40)	0.13 (3.20)	0.60 (15.20)	0.70 (17.8)	0.75 (19.10)	1.75 (44.50)	1.00 (25.40)	0.19 (4.70)	0.50 (14.20)

Note 1: Mounting kit includes all hardware to mount generators and manifold block.

Bracket only: NAB18-25

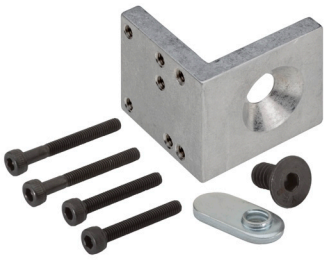

Bracket & Mounting Kit: NMK-NAB18-25

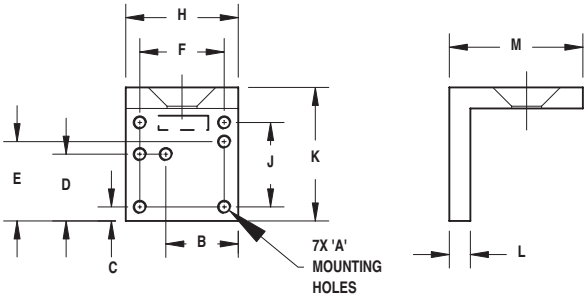

Bracket accepts: NVP00, NVP0X, NVP10 & NVP1X Series generators and NMB18-25 manifold block.

Part Number		Dimensions										Weight oz (g)
		A- Mtg Holes	B in. (mm)	C in. (mm)	D in. (mm)	E in. (mm)	F, J in. (mm)	H in. (mm)	K in. (mm)	L in. (mm)	M in. (mm)	
NAB18-25	Fits 1/4 T-Slot (Fits 6.5 mm T-Slot)	M3 x 0.5	0.64 (16.40)	0.13 (3.20)	0.60 (15.20)	0.70 (17.80)	0.75 (19.10)	1.00 (25.40)	1.19 (30.20)	0.19	1.19	0.6 oz

Note 1: Mounting kit includes all hardware to mount generators and manifold block.

How to specify

Bracket only: See Model Numbers: i.e. **NAB18-25**

Bracket & Mounting Kit: Add "NMK" for mounting kit in front of Model Number i.e. **NMK-NAB18-25**

Universal Brackets and Mounting Kits for 1.5" Extrusions

Bracket only: NUB14-40 (5/16th T-slot)

Bracket only: NIUB14-40 (10mm T-slot)

Bracket and Mounting Kit:
NMK-NUB14-40 (5/16th T-slot)

Bracket and Mounting Kit:
NIMK-NUB14-40 (10mm T-slot)

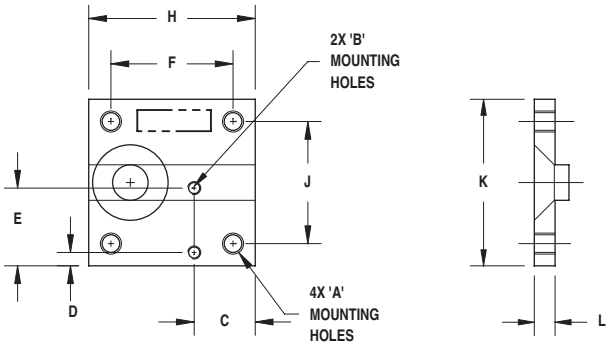

Accepts all NVP10 Series generators and above, and NMB14 manifold blocks.

Note 1: Mounting kit includes all hardware to mount generators and manifold block.

Part Number		A- Mtg Holes	B- Mtg Holes	C in. (mm)	D in. (mm)	E in. (mm)	F, J in. (mm)	H, K in. (mm)	L in. (mm)	Weight oz (g)
NUB14-40	Fits 5/16 T-Slot	10-32	M3 x 0.5	0.55	0.12	0.70	1.10	1.50	0.19	0.70
NIUB14-40	(Fits 10mm T-Slot)			(14.00)	(3.00)	(17.80)	(27.90)	(38.10)	(4.70)	(19.80)

Universal Brackets (Adjustable) and Mounting Kits for 1.5" Extrusions

Bracket only: NUBA14-40 (5/16th T-slot)

Bracket only: NIUBA14-40 (10mm T-slot)

Bracket and Mounting Kit:
NMK-NUB14-40 (5/16th T-slot)

Bracket and Mounting Kit:
NIMK-NUB14-40 (10mm T-slot)

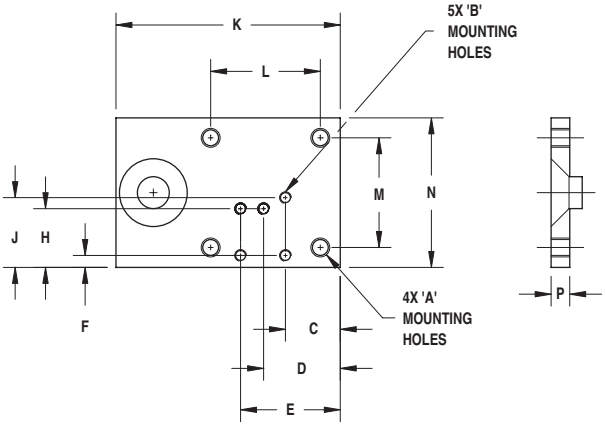

Accepts all NVP Series generators and NMB14 Cup Mounts.

Note 1: Mounting kit includes all hardware to mount generatorss and manifold block.

Part Number		A- Mtg Holes	B- Mtg Holes	C in. (mm)	D in. (mm)	E in. (mm)	F in. (mm)	H in. (mm)	J in. (mm)	K in. (mm)	L in. (mm)	M in. (mm)	N in. (mm)	P in. (mm)	Weight oz (g)
NUBA14-40	Fits 5/16 T-Slot	10-32	M3 x 0.5	0.55	0.77	1.00	0.12	0.59	0.70	2.25	1.10	1.10	1.50	0.19	1.00
NIUBA14-40	(Fits 10mm T-Slot)			(14.00)	(19.50)	(25.40)	(3.00)	(15.00)	(17.80)	(57.20)	(27.90)	(27.90)	(38.10)	(4.70)	(28.30)

How to specify

Bracket only: See Model Numbers: i.e. **NUB14-40**

Bracket & Mounting Kit: Add "NMK" for mounting kit in front of Model Number i.e. **NMK-NUB14-40**

Angled Brackets and Mounting Kits for 1.5” Extrusions

Bracket only: NAB14-40

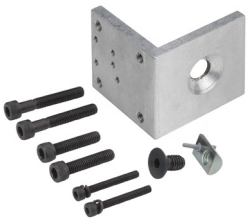

Bracket & Mounting Kit: NMK-NAB14-40
Available with optional adjustment knob.
See Bracket Construction Sequence below

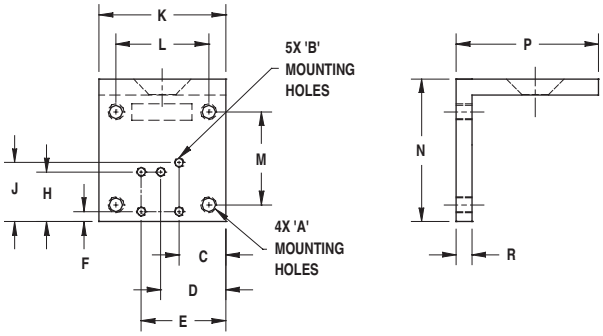

Accepts all NVP Series generators and NMB14 Cup Mounts.

Note 1: Mounting kit includes all hardware to mount generators and manifold block.

Part Number		Dimensions A- Mtg Holes	B- Mtg Holes	C in. (mm)	D in. (mm)	E in. (mm)	F in. (mm)	H in. (mm)	J in. (mm)	K in. (mm)	L in. (mm)	M in. (mm)	N in. (mm)	P in. (mm)	R in. (mm)	Weight oz (g)
NAB14-40	Fits 5/16 T-Slot	10-32	M3 x 0.5	0.55	0.77	1.00	0.12	0.59	0.70	1.50	1.10	1.50	1.69	1.69	0.19	1.00
NIAB14-40	Fits 10mm T-Slot			(14.00)	(19.50)	(25.4.0)	(3.00)	(15.00)	(17.80)	(38.10)	(27.90)	(38.10)	(42.80)	(42.80)	(4.70)	(28.30)

How to specify

Bracket only: See Model Numbers: i.e. NUB14-40

Bracket & Mounting Kit: Add “NMK” for mounting kit in front of Model Number i.e. NMK-NUB14-40

Bracket & Mounting Kit with Adjustment Knob: NMK-NABK14-40 (angled brackets only)

Standard, Adjustable & Angled Bracket Construction Sequence:

Standard Bracket

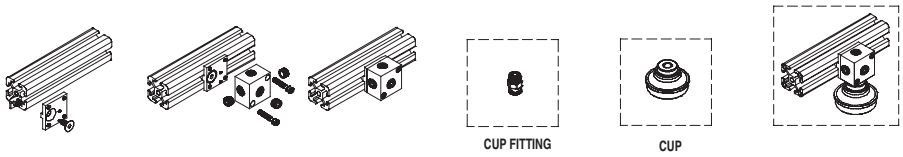

Adjustable Bracket

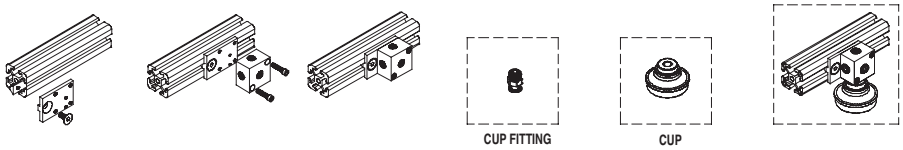

Angled Bracket

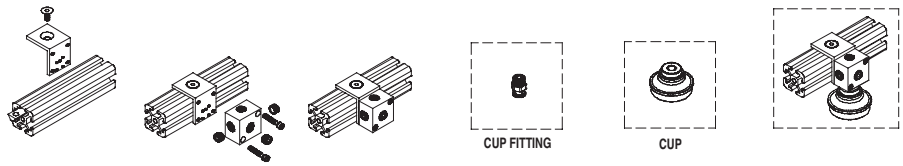

Angled Bracket w/Optional Adjustment Knob

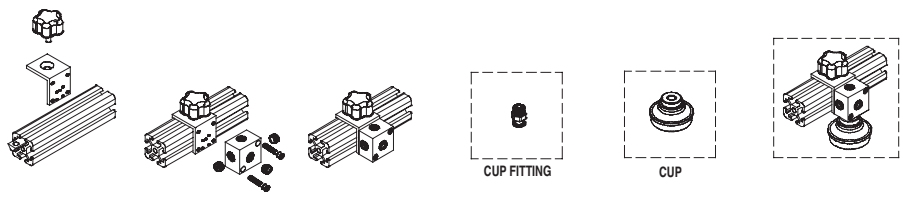

MANIFOLD BLOCKS

Vacuum Cup Mount/Manifold Block

Combination Cup Mount and Manifold Block Compatible with 1" (25 mm) and 1.5" (40 mm) extrusions

NMB14-40 Vacuum cup Mount/Manifold Block

Ideal applications

- Robotic End Effectors/End-of-Arm Tooling
- Removing products from molds
- Sheet metal transfer
- Palletizing of work pieces
- Nesting fixtures
- Assembly fixtures
- Pick & place

Features and benefits

- Direct mount for cups – maintains consistent height for all cups
- High performance – full vacuum flow out performs competition
- Easy to assemble, modular End-of-Arm Tooling components – minimal design time required
- Flexible design – 5 ports for easy plumbing, allows side entry vacuum, adaptable for all End-of-Arm Tooling configurations
- Square shape – easily mounts to any side of the extrusion, products stay square and flush
- Vacuum lines may be connected in series or home run plumbed to streamline the tooling fixture
- Anodized aluminum – lightweight, extends performance and life of robot, allows higher speeds
- Large thread sizes provides high flow rates for safe handling of porous objects

Simplify your End-of-Arm tooling devices using our dual purpose NMB Series - Vacuum Cup Mount/ Manifold Block. Whether you are mounting vacuum cups to extrusions and/or distributing vacuum to multiple locations, the NMB Series streamlines your design with one multi-functional component.

For design and plumbing flexibility, the NMB Series features five vacuum ports and three mounting options that easily connect vacuum generatorss and cups to 5/16" (10 mm) or 1/4" (6.50 mm) T-slot extrusions. Extra vacuum ports allow optional accessories to be directly mounted to the manifold block i.e. vacuum gauges or remotely plumbed such as vacuum switches, sensors or blow-off capabilities.

High vacuum flow is critical for handling porous objects. IMI Norgren offers up to 3/4" NPT ports to ensure high flow paths.

NVP80-200M distributes vacuum to four cup mount/manifold assemblies to pick up corrugated board.

Options:

3 Mounting port options: standard, bottom or face mount

9 Models: 1/8 to 3/4 NPT

3 Universal brackets: fixed, adjustable or angled

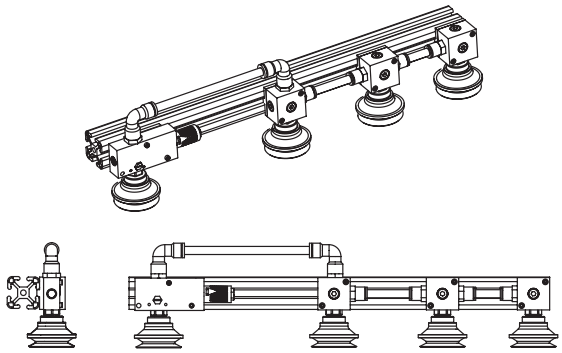

The Vacuum cup mount/manifold easily connects to the T-slot extrusion using a Universal Bracket.

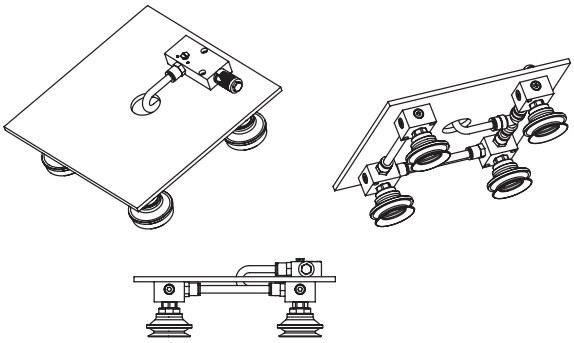

For non T-slot applications, attach the vacuum cup mount/manifold to the underside of a flat tooling plate head.

Vacuum Cup Mount/Manifold Configuration & Specifications:

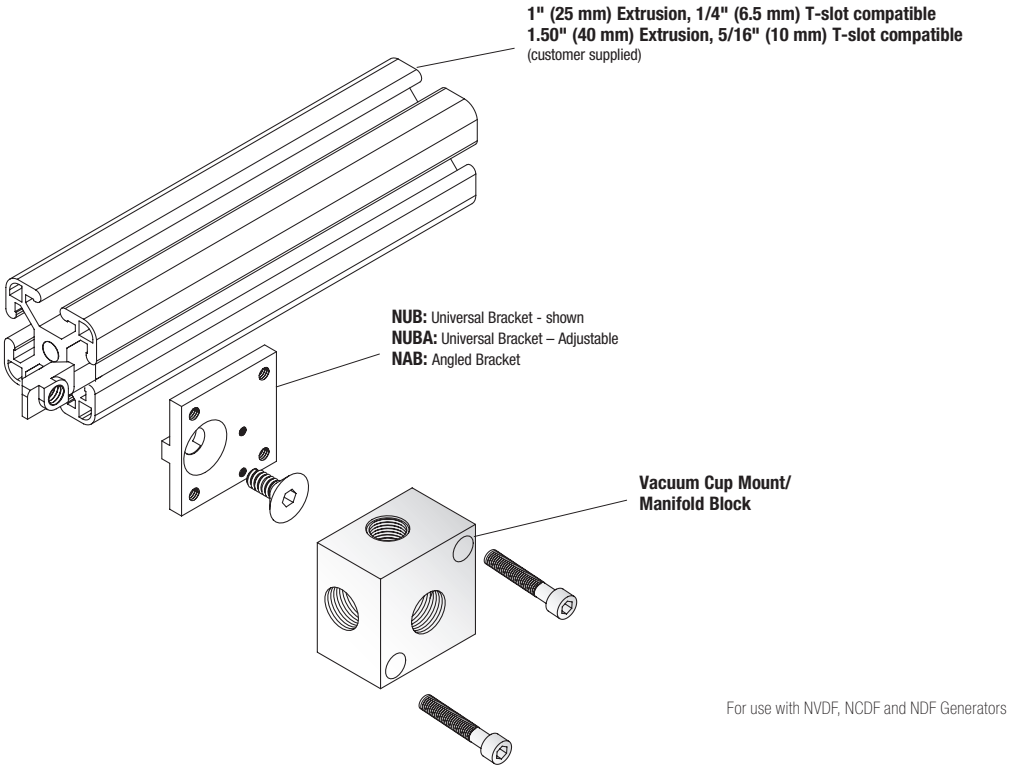

For use with NVDF, NCDF and NDF Generators

How to specify

Part Number	Vacuum Cup Mount/Manifold Block
NMB18/NMB18M-25	1/8 NPT [G1/8] – All Female Ports – recommended for 1" (25mm) extrusions
NMB14/NMB14M-40	1/4 NPT [G1/4] – All Female Ports – recommended for 1.5" (40mm) extrusions
NMBB14/NMBB14M-40	1/4 NPT [G1/4] – Bottom Male Port – recommended for 1.5" (40mm) extrusions
NMBB38/NMBB38M-40	3/8 NPT [G3/8] – Bottom Male Port – recommended for 1.5" (40mm) extrusions
NMBB12-40	1/2 NPT [G1/2] – Bottom Male Port – recommended for 1.5" (40mm) extrusions
NMBF14/NMBF14M-40	1/4 NPT [G1/4] – Face Male Port – recommended for 1.5" (40mm) extrusions
NMBF38/NMBF38M-40	3/8 NPT [G3/8] – Face Male Port – recommended for 1.5" (40mm) extrusions
NMBF12/NMBF12M-40	1/2 NPT [G1/2] – Face Male Port – recommended for 1.5" (40mm) extrusions
NMBF34/NMBF34M-40	3/4 NPT [G3/4] – Face Male Port – recommended for 1.5" (40mm) extrusions

Please note: All vacuum cup mount/manifolds include 3 flush plugs to seal extra ports.

Please order vacuum cup mount/manifolds as separate line items based on part number i.e. NMBB12-40

If you would like parts factory assembled, please specify on order "factory assembled."

To attach Vacuum Cup Mount/Manifold to extrusion, please see Universal Bracket mounting options

Vacuum Cup Mount/Manifold – All Female ports: NMB14-40, 18-25

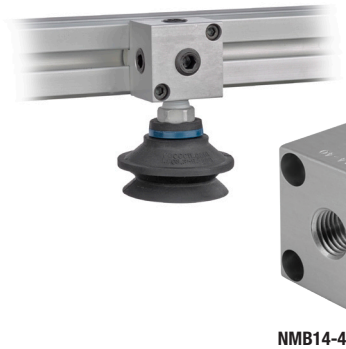

NMB18-25

NMB14-40

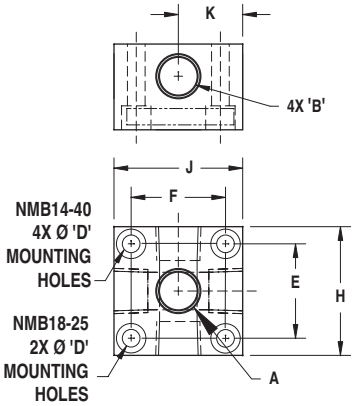

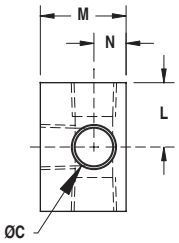

Part Number	Dimensions - Fits 1" (25 mm) Extrusions A-Thread	B- Thread	C in. (mm)	D in. (mm)	E, F in. (mm)	H, J in. (mm)	K, L in. (mm)	M in. (mm)	N in. (mm)	P in. (mm)	Weight oz (g)
NMB18-25	1/8 NPT	1/8 NPT	0.34	0.10	0.75	1.00	0.50	0.75	0.25	N/A	1.20
NMB18M-25	(G 1/8)	(G 1/8)	(8.60)	(3.30)	(19.10)	(25.40)	(12.70)	(19.00)	(6.40)	(N/A)	(34.00)

Part Number	Dimensions - Fits 1.50" (40 mm) Extrusions A-Thread	B- Thread	C in. (mm)	D in. (mm)	E, F in. (mm)	H, J in. (mm)	K, L in. (mm)	M in. (mm)	N in. (mm)	P in. (mm)	Weight oz (g)
NMB14-40	1/4 NPT	1/4 NPT	0.44	0.21	1.10	1.50	0.75	1.00	0.38	N/A	2.60
NMB14M-40	(G 1/4)	(G 1/4)	(11.10)	(5.20)	(27.90)	(38.10)	(19.00)	(25.40)	(9.530	(N/A)	(73.70)

Vacuum Cup Mount/Manifold – Bottom Male ports: NMBB(14, 38, 12) -40

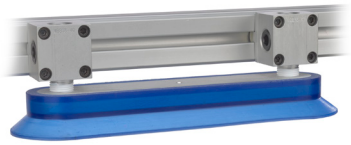

Can be used with NVDF, NCDF and NDF Generators. Also available in other thread sizes including 1/8 NPT (G 1/8). Consult factory.

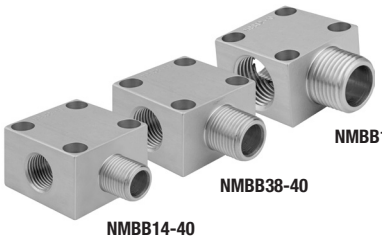

NMBB12-40

NMBB38-40

NMBB14-40

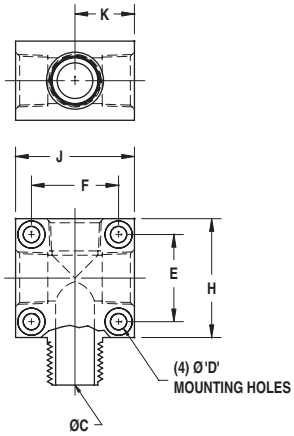

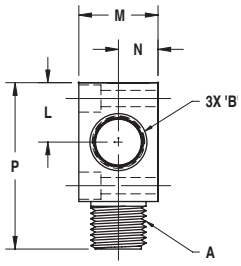

Part Number	Dimensions - Fits 1.5" [40mm] Extrusions A-Thread	B- Thread	C in. (mm)	D in. (mm)	E, F in. (mm)	H, J in. (mm)	K, L in. (mm)	M in. (mm)	N in. (mm)	P in. (mm)	Weight oz (g)
NMBB14-40	1/4 NPT	1/4 NPT	0.34							2.00	2.60
NMBB14M-40	(G 1/4)	(G 1/4)	(8.60)							(50.80)	(73.70)
NMBB38-40	3/8 NPT	3/8 NPT	0.45	0.21	1.10	1.50	0.75	1.00	0.50	2.10	2.90
NMBB38M-40	(G 3/8)	(G 3/8)	(11.40)	(5.20)	(27.90)	(38.10)	(19.00)	(25.40)	(12.70)	(53.30)	(82.20)
NMBB12-40	1/2 NPT	1/2 NPT	0.58							2.10	1.90
NMBB12M-40	(G 1/2)	(G 1/2)	(14.70)							(53.30)	(53.90)

Vacuum Cup Mount/Manifold – Face Male Port: NMBF(14, 38, 12, 34) -40

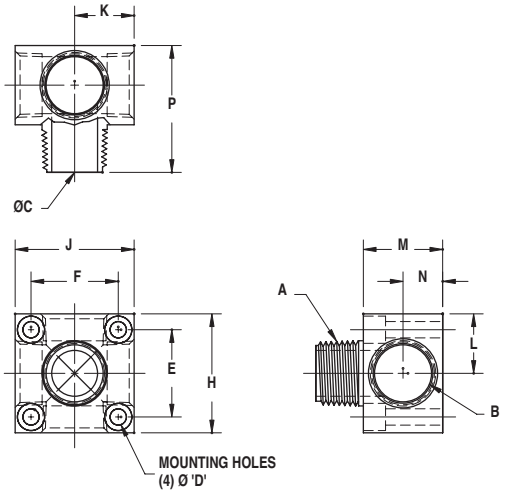

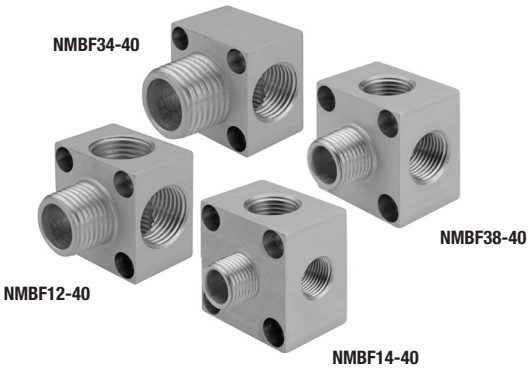

Can be used with NVDF, NCDF and NDF Generators. Also available in other thread sizes including 1/8 NPT (G 1/8). Consult factory.

Model #	Dimensions - Fits 1.5" (40 mm) Extrusions A-Thread	B- Thread	C in. (mm)	D in. (mm)	E, F in. (mm)	H, J in. (mm)	K, L in. (mm)	M in. (mm)	N in. (mm)	P in. (mm)	Weight oz (g)
NMBF14-40	1/4 NPT	4 x 1/4 NPT	0.34							1.50	2.60
NMBF14M-40	(G 1/4)	(4 x G 1/4)	(8.60)							(38.10)	(73.70)
NMBF38-40	3/8 NPT	4 x 3/8 NPT	0.45							1.50	2.70
NMBF38M-40	(G 3/8)	(4 x G 3/8)	(11.40)							(38.10)	(76.50)
NMBF12-40	1/2 NPT	4 x 1/2 NPT	0.58	0.21 (5.20)	1.10 (27.90)	1.50 (38.10)	0.75 (19.00)	1.00 (25.40)	0.50 (12.70)	1.60	1.70
NMBF12M-40	(G 1/2)	(4 x G 1/2)	(14.70)							(40.60)	(48.20)
NMBF34-40	3/4 NPT	2 x 3/4 NPT	0.75							1.60	1.80
NMBF34M-40	(G 3/4)	(2 x G 3/4)	(19.10)							(40.60)	(51.00)