102GA, 101GA, 124GA
Pilot operated check valves

- **Port size: 1/8 ... 1/2**
- **Thread form: ISO G, ISO R, NPT**
- **Pilot port size: M5 ... 1/4**
- **Very compact units**
- **Safer pneumatic systems**

Technical features

Medium:
Compressed air
Operation:
Essentially a pilot operated check valve, a blocking fitting allows air flow in both directions if a pilot pressure is applied to port 12. When pressure to the pilot port is removed, flow occurs in one direction only, due to an integral non-return valve. When used in pairs, blocking fittings can control an actuator to give safe operation in the event of an electrical problem, air failure or tube breakage. In order to provide a 'safe system', all possible conditions need to be considered in the event of an emergency.

Operating pressure:
1... 10 bar (14 ... 145 psi)
Pilot pressure:
See table
Thread size:
ISO G 1/8 ... 1/2
ISO R 1/8 ... 1/2
1/8 ... 1/2 NPT

Ambient/Media temperature:
0°C ... +80°C (+32°F ... +176°F)
Air supply must be dry enough to avoid ice formation at temperatures below +2°C (+35°F).

Materials
Cover (pilot thread): Brass
Lock rings: SUS
Main body: Brass
Case (female thread): Zinc die-casting
Valve: SUS and NBR
Springs: SUS
Sealing: NBR

Technical data

Symbol	Port size 1	Port size 2	Pilot port	Min. Pilot Pressure (bar)	Model
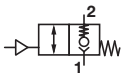	G1/8	G1/8	M5	1	102GA1818
	G1/4	G1/4	G1/8	1	102GA2828
	G3/8	G3/8	G1/8	1	102GA3838
	G1/2	G1/2	G1/4	1	102GA4848
	R1/8	Rc1/8	M5	1	101GA1818
	R1/4	Rc1/4	Rc1/8	1	101GA2828
	R3/8	Rc3/8	Rc1/8	1	101GA3838
	R1/2	Rc1/2	Rc1/4	1	101GA4848
	1/8 NPT	1/8 NPT	M5	1	124GA1818
	1/4 NPT	1/4 NPT	1/8 NPT	1	124GA2828
	3/8 NPT	3/8 NPT	1/8 NPT	1	124GA3838
	1/2 NPT	1/2 NPT	1/4 NPT	1	124GA4848

Note: The pilot pressure must be at least 50% of the operating pressure.

ISO G thread

Dimensions in mm
Projection/First angle

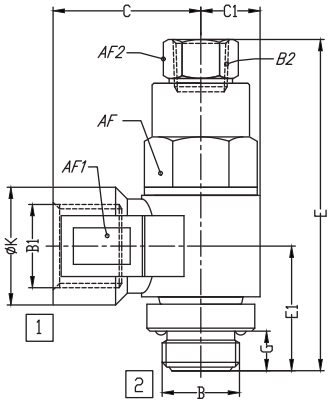

B	B1	B2	C	C1	E	E1	G	ØK	AF	AF1	AF2	Weight (g)	Model
G1/8	G1/8	M5	17.7	7.3	40.8	16.2	5.1	14.5	12	15	8	35	102GA1818
G1/4	G1/4	G1/8	26.0	9.5	48.9	21.3	6.6	18.0	17	19	12	77	102GA2828
G3/8	G3/8	G1/8	30.3	11.6	56.7	24.8	7.2	23.0	20	24	12	128	102GA3838
G1/2	G1/2	G1/4	38.2	14.0	70.6	29.6	8.7	26.5	24	28	17	219	102GA4848

ISO R thread

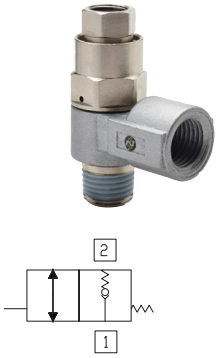

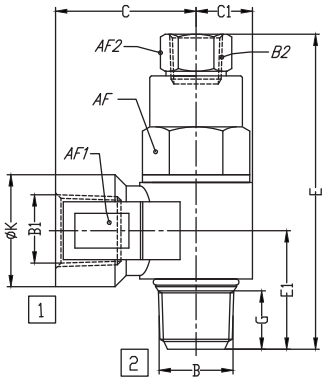

B	B1	B2	C	C1	E	E1	G	ØK	AF	AF1	AF2	Weight (g)	Model
R1/8	Rc1/8	M5	18.2	7.3	40.8	15.4	7.6	14.5	12	15	8	35	101GA1818
R1/4	Rc1/4	Rc1/8	26.5	9.5	48.9	21.1	10.6	18.0	17	19	12	75	101GA2828
R3/8	Rc3/8	Rc1/8	30.8	11.6	56.7	24.8	12.6	23.0	20	24	12	123	101GA3838
R1/2	Rc1/2	Rc1/4	38.7	14.0	70.6	31.0	14.5	26.5	24	28	17	207	101GA4848

NPT thread

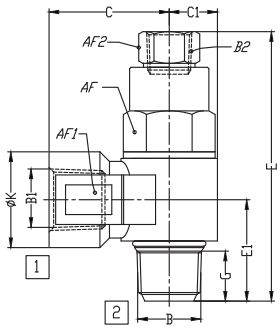

B	B1	B2	C	C1	E	E1	G	ØK	AF	AF1	AF2	Weight (g)	Mod.
1/8 NPT	1/8 NPT	M5	1,61	0,29	1,61	0,64	0,20	0,57	0,47	0,59	0,31	35	124GA1818
1/4 NPT	1/4 NPT	1/8 NPT	1,93	0,37	1,93	0,84	0,26	0,71	0,67	0,75	0,47	77	124GA2828
3/8 NPT	3/8 NPT	1/8 NPT	2,23	0,46	2,23	0,98	0,28	0,91	0,79	0,94	0,47	128	124GA3838
1/2 NPT	1/2 NPT	1/4 NPT	2,78	0,55	2,78	1,17	0,34	1,04	0,94	1,10	0,67	219	124GA4848

Warning

These products are intended for use in industrial compressed air systems only. Do not use these products where pressures and temperatures can exceed those listed under »**Technical features/ data**«.
Before using these products with fluids other than those specified, for non-industrial applications, life-support systems or other applications not within published specifications, consult Norgren Ltd.

Through misuse, age, or malfunction, components used in fluid power systems can fail in various modes.

The system designer is warned to consider the failure modes of all component parts used in fluid power systems and to provide adequate safeguards to prevent personal injury or damage to equipment in the event of such failure.
System designers must provide a warning to end users in the system instructional manual if protection against a failure mode cannot be adequately provided.
System designers and end users are cautioned to review specific warnings found in instruction sheets packed and shipped with these products.