NORGREN HERION

OBSOLETE DOCUMENT Technical Reference Only

pQ05

Digital Amplifier and Controller for Proportional valves of all Kind and Closed Loop Systems

The amplifier card pQ05 is used for

With or without electrical feedback transducers

- proportional directional valves direct and pilot operated
- proportional flow control valves
- proportional pressure reducing valves
- proportional pressure regulating valves

Controlling of different process values by installations and systems, e.g.:

- pressure
- speed
- position
- revolutions per minute
- torque
- power
- controlling of two pressures
- cascade controlling of components

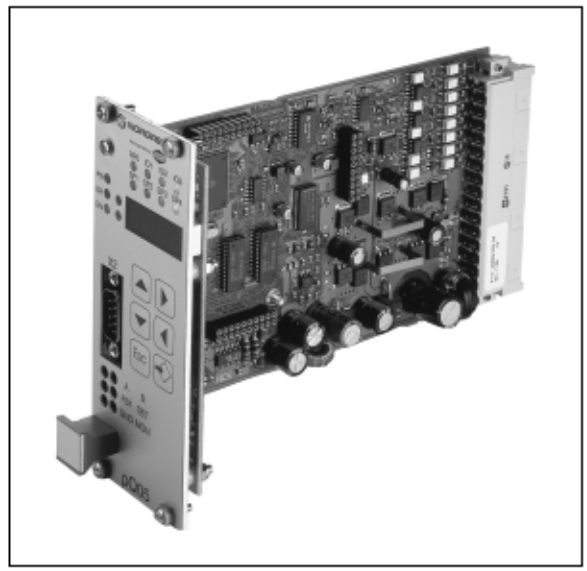

Technical features

- The card is conform to the EC requirements
- Differential amplifier input for set points in the range of 0 … ±10 V, resolution 14 bit.
- Additional single ended independent set point inputs, (one for the range of 0 … ±10 V, resolution 14 bit; the other for the range of 0 ... 20 mA/4 ... 20 mA , resolution 14 bit).
- Integrated reference voltage supply of ±10 V (10 mA max.), to supply set point potentiometer or actual value transducer.
- 4 (optional 5) recallable digital adjustable set points.
- two independent analog set point inputs with 14 bit resolution and a high adjustment range (depending on input 0 ... 12 V or 0 ... 20 mA/4 ... 20 mA).
- direction externally set through inputs + Sign and - Sign.
- Enable signal for output stages.
- Ramp=0 input for fast ramp function zeroing.
- Status outputs Error and Comparator.
- All digital inputs and outputs are optically isolated for functional security.
- Four 7-Segment displays and six buttons for easy handling and display.
- Function indication through front panel by LED's.
- Additional switching output (24 V, max 1 A) to directly disable safety valve.
- Analog outputs to perform controller functions and / or enable subsequent electronic devices and monitoring (0 … ±10 V, 12 bit resolution).
- additional front panel test jacks for easy commissioning. Test jacks for point (SET)*1, for feedback 1 (FB1), for solenoid currents (A) and (B) and monitor input (MON) display for analog display of all parameters (± 10 V, 12 bit resolution).
- Serial interface RS232.

Ordering information

Amplifier Modus 4, closed loop process, single, 1 proportional valve with 2 solenoids

Type: 5988198

Our policy is one of continuous research and development. We therefore reserve the right to amend, without notice, the specifications given in this document.

Short description

The digital amplifier pQ05 features leading edge technology. This electronic device meets the industrial standards for EMC. This ensures a high interference security and low interference emission.
The performance characteristics are possible through the use of the most current microprocessor technology. In additional to all control functions, the microprocessor handles closed-loop control. The system features are essentially determined by the software and provide reserve capacity for further developments and adaptations.
The following features distinguish the pQ05 series:

Fully digitised amplifier and controller with the advantage of
- no on-board potentiometer
- no jumpers settings required
- digital setting and display of all parameters
- user safety when programming
- no potentiometer adjustment for measurement of solenoid current

Flexible and reliable system:
- use of a modern 16 Bit µC
- high power reserve
- easy software update by use of a Flash-Eprom; adaptations and extensions can be made without change to EPROM (download from PC via RS232)
- high reliability and safety through the use of a hardware watch-dog and reset module
- variable settings for magnetic systems and sensor signals making high flexibility possible

Functional use of the interface (partly still in development):
- change of selected parameters "on-the-fly" without interference or interrupting the controller
- analyzation of system performance through selection of display parameters with the PC
- a monitoring program allows direct access to amplifier with the use of external system controllers (e.g. programmable logic controllers/PLC)

Compatibility to existing systems:
- Compatible to pQ04
- Pin assignment identical where necessary
- Functionality covered basically 100 %
- Organization of parameters similar

Technical data

Parameters	Range, characteristics
Supply voltage	DC (12 V on request) 18 ... 30 V, residual ripple < 10%
Solenoid systems selection	0.8 A / 1.1A / 1.3 A / 1.6 A / 2.4 A / 2.7 A / 3.5 A
Power input	Max. 50 VA
Applicable fuse (quick)	3.15 A
Auxiliary voltage	± 10 V, max. load 10 mA
Control voltage for external recallable set point	24 V ± 10%, residual ripple ≤ 10%, current input ≤ 20 mA each
Ambient temperature	0°C ... 50°C (other range on request)
Storage temperature	- 20°C ... 60°C
Plug connection	DIN 41 612, 48 pol. form F gold plated
EMC	
Protection	Burst on wires as per EN 61000-4-4 HF-Field as per EN 61000-4-3 ESD as per EN 61000-4-2
Emissions	Emissions depending on power as per EN 50011 Radiated emissions as per EN 55011
Dimensions	
Front panel/PCB	50,5 x 128,4 mm; 10 TE , 3 HE / 100 x 160 mm Euro format
Input signals	
Analog set values	1 input, differentiel 14 Bit resolution, 0 ... ± 10 V 1 input, single ended 14 Bit resolution, 0...± 10 V 1 input, single ended 14 Bit resolution, 0 or 4...20 mA (R = 250 Ω)
Analog feed back (sensor input)	 1 input, 14 Bit resolution, 0... ± 12 V, 0...20 mA / 4...20 mA Offset: 3..10 V, Gain: 0 ...14 (R = 100 Ω) 1 input, 14 Bit resolution, 0... ± 10 V
Digital inputs	8 inputs, voltage level 0 V/24 V 10 mA (S1.01 ... S1.04, ENABLE, RAMP 0, + SIGN, - SIGN)

Parameters	Range, characteristics
Output signals	
Solenoid current	2 output stages for up to 3.5 A; with over-energization and quick de-energization
Analog output	1 output, 12 bit resolution, 0 ... ± 10 V; for contrlling of subsequent electronic
Monitor output	1 output, 12 Bit resolution, 0 ... ± 10 V; for monitoring
Digital outputs	2 outputs, voltage level 0 V/24 10 mA (Error, Comparator)
Test jacks	Solenoid current, sensor 1, set value, Monitor and GND
Auxiliary voltage	± 10 V, max. load 10 mA
Interface	RS232 with 9-pole Sub-D connector at front panel and
	back connector available
Display and operation	4 digit display, 6 buttons (Up, Down, Left, Right, Enter and Esc) Status-LED's: PW (Power), EN (Enable), ER (Error), SP1 ... SP4, RP0 (Ramp = 0), I01 ... I03
Frequencies and cycle times	
PWM Frequency	18 kHz
Cycle times	Current controller 0,22 msec, inner closed loop controller 0,22 msec (for valve feedback), external closed loop controller 2 0,44 msec

Our policy is one of continuous research and development. We therefore reserve the right to amend, without notice, the specifications given in this document.

Order code overview and accessories

Mode	Description	Type
1	Open loop, 1 proportional valve with 2 solenoids without feedback	**5988197**
4	Closed loop process, single, 1 proportional valve with 2 solenoids and feedback of process value (pressure, velocity, position, force, torque etc.)	**5988198**
8	Closed loop processes, double, 2 independent proportional valve with 1 solenoid each and feedback of two independent process values	**5988199**
10	Controller function without valve, control of 1 process value	**5988200**
11	Controller function without valve, control of 2 process values (cascaded controller, e.g. position and velocity controller)	**5988201**

Accessories

Mode	Description	Type
pQ05 Tool	Operation and parameterize software. For handling, operation, monitoring, parameterization, storage and documentation of adjustments and parameter settings. Available in English and German with integrated online help function. Software package complete with RS232 interface cable	**5988202**
Interface cable	Interface cable for communication between PC and pQ05 for RS232; 2 connectors female 9-pole SUB-4 with approx. 4 m cable	**5988203**
Card holder KT11	48 pole with terminals (2,5 mm²) for mounting of pQ05 on assembly plate	**5998540**
Back-Plane	Back-Plane for quick wiring of boards, with blade-contact connector 48 pole / form F	**5988204**
Universal-Rack complete	Module rack completely mounted with Back-Plane	**5988206**

Dimensions

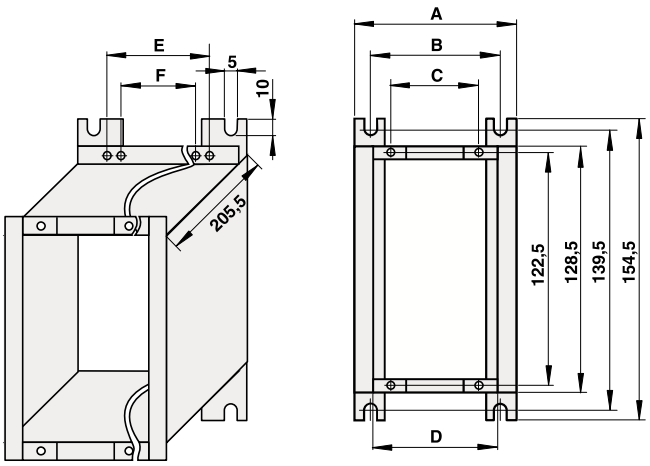

A	B	C	D	E	F
80,0	65,0	35,5	51,2	45,2	36,0

Universal-Rack

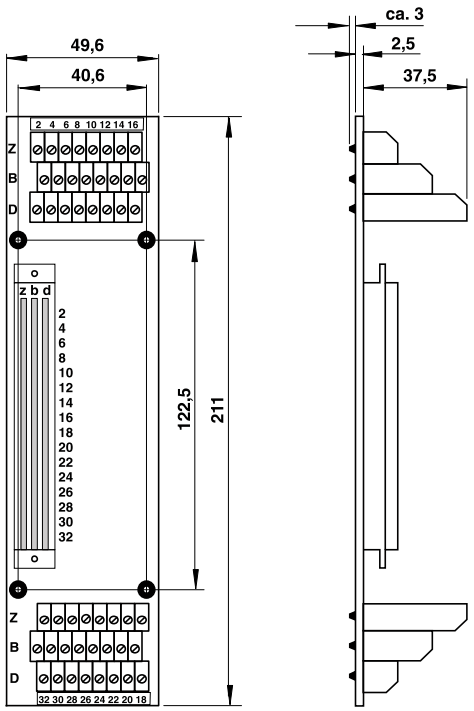

Back-Plane

Our policy is one of continuous research and development. We therefore reserve the right to amend, without notice, the specifications given in this document.

Serial interface and the program pQ05 Tool

Remote operation or remote parameter adjustment may be executed through the serial interface RS232.
The following transmission parameters are applicable:
Transmission rate: 19200 baud
Data format: 8 data-bits, 1 stop-bit, no parity
Voltage level: 12 V

With the use of the program pQ05Tool, all the parameters may be manipulated. It enables you to edit, download and upload parameters and sets of parameters and also has a wide range of other functions.

The pQ05 Tool standard operation display screen

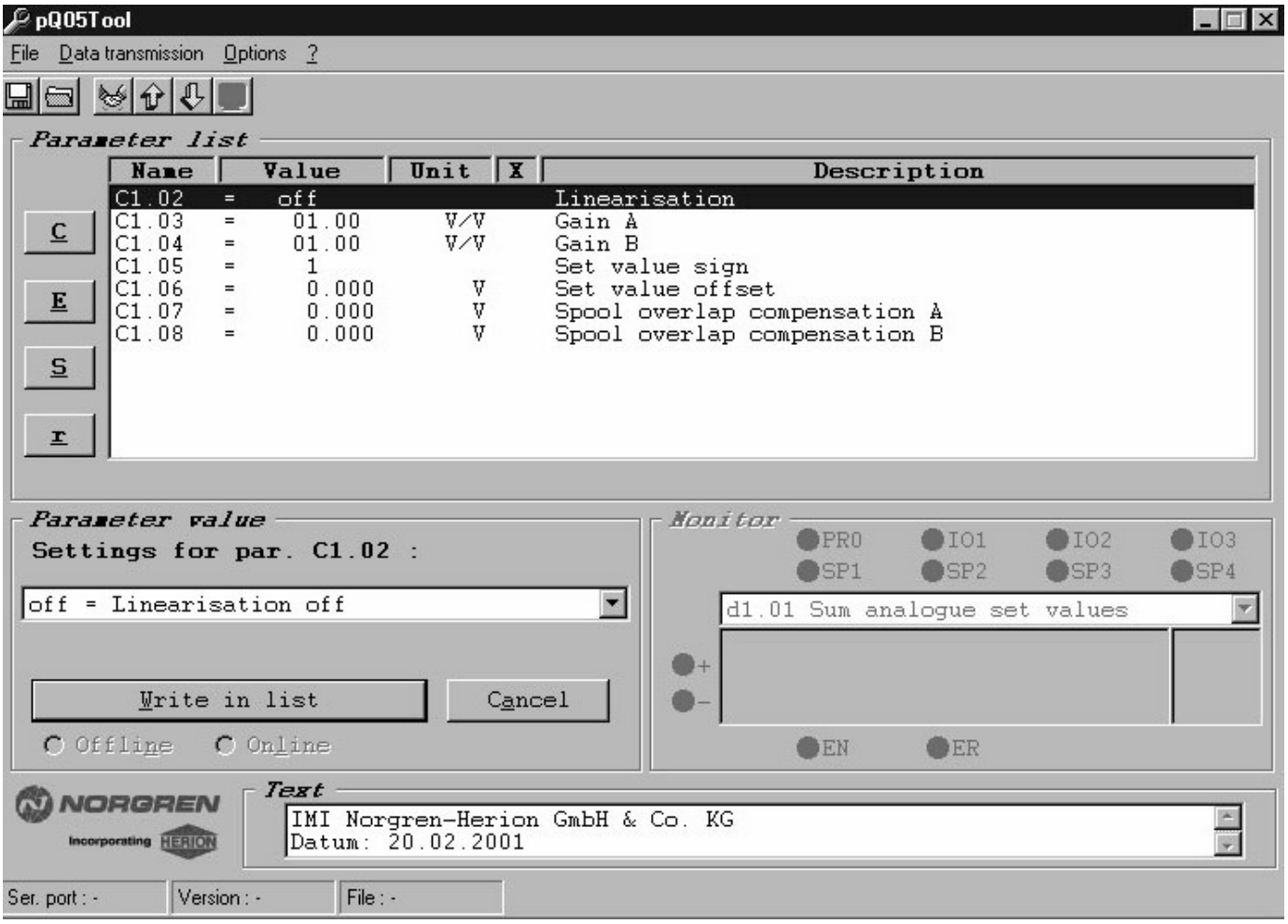

Our policy is one of continuous research and development. We therefore reserve the right to amend, without notice, the specifications given in this document.

Display and keypad

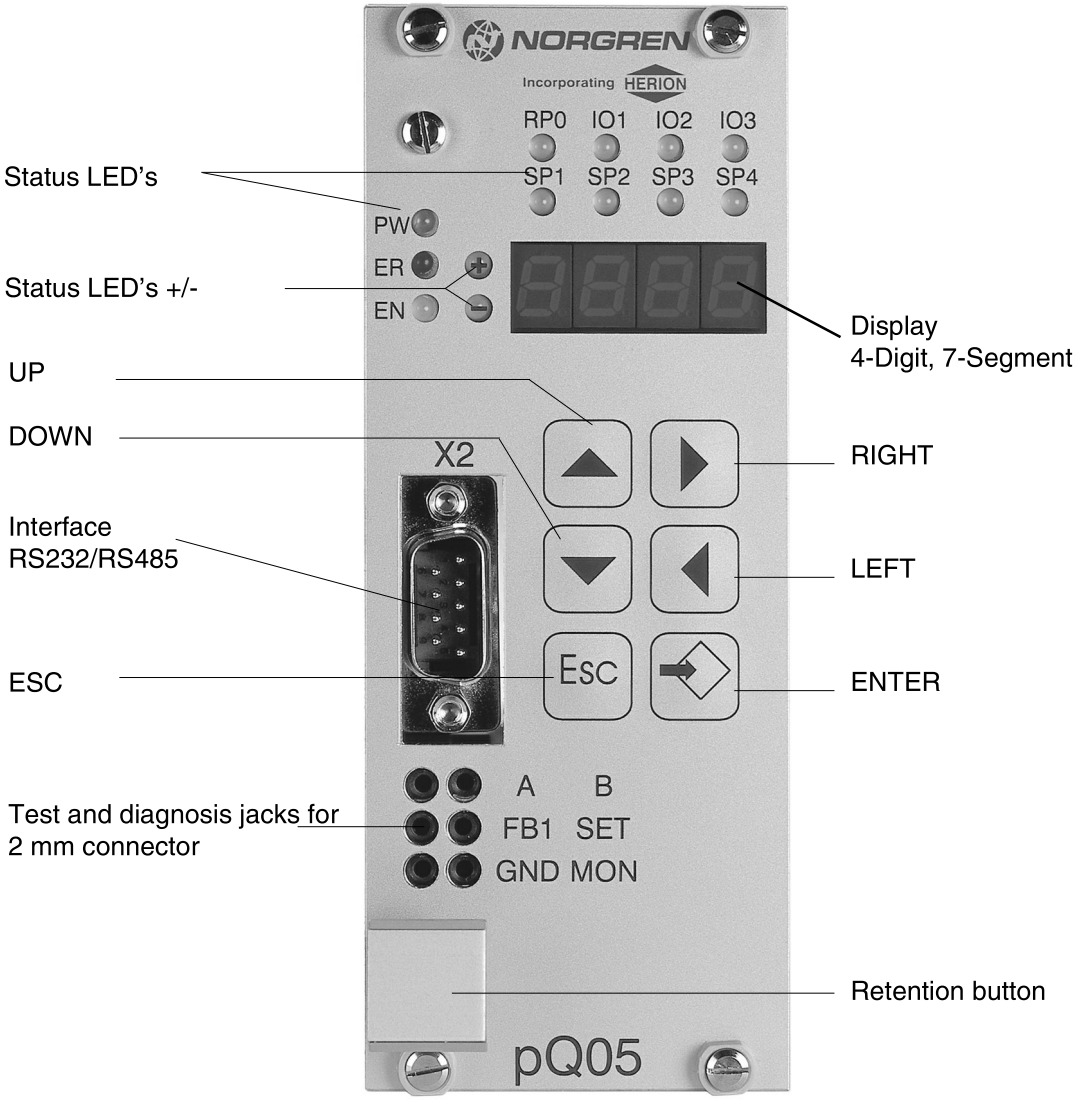

Programming and display parameters, through the use of the six buttons and the LED display located on the front panel of the amplifier card. The menu structure an amplifier card with a simple control circuit:

display	Set point / ramps / Auxiliary			Controller	Extended
d	S / r / A			C	E
d1.01	S1.01	r1.01	A1.01	C1.00	E00
•	•	•	•	•	•
•	•	•	•	•	•
d1.13	S1.08	r1.04	A1.02	C1.26	E21

Element	Function
Status LED's	Display of status and signals at the digital inputs and outputs
Status LED's für +/-	Display of set point direction through polarity signs for parameters and measured values
Display	4-digit display of parameters and measured values
Buttons UP, DOWN, LEFT, RIGHT, ESC and ENTER	All operating, programming and saving may be performed with the buttons UP, DOWN, LEFT, RIGHT, ESC and ENTER
Serial interface	RS232/RS485 (optional), trough which programming and accessing parameters via PC or communications to machine, or from amplifier to amplifier
Measuring and test jacks	Direct measurement of set point, actual value, solenoid currents and internal values via the monitor output. Use 2 mm sockets (S1.06, FB1, A; d1.01 ... d2.13)

Our policy is one of continuous research and development. We therefore reserve the right to amend, without notice, the specifications given in this document.

Hardware Block Diagram

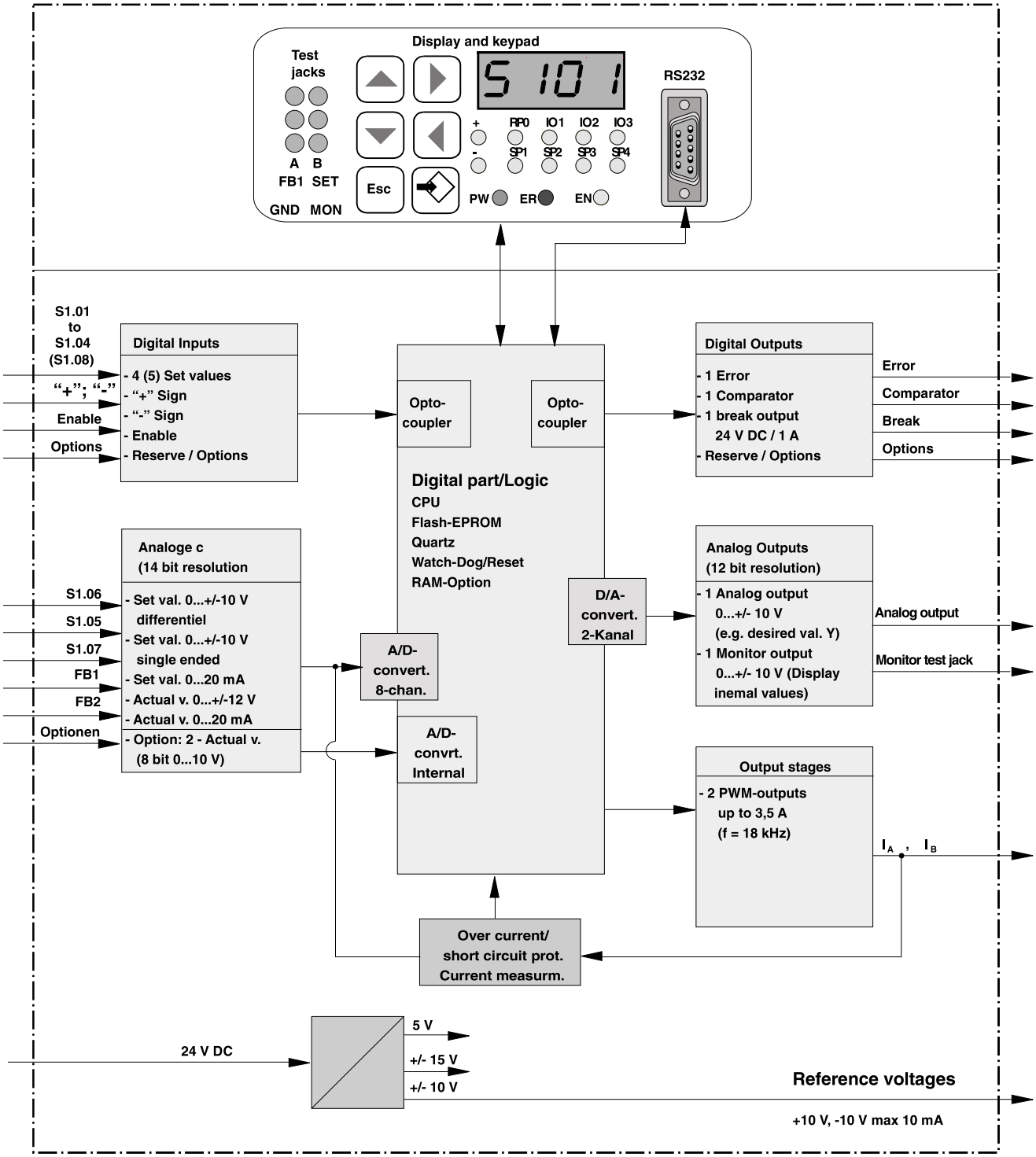

Our policy is one of continuous research and development. We therefore reserve the right to amend, without notice, the specifications given in this document.

Pin assignment X1 (48 poles)

Pin	d	b	z
2	0 V (External)	Dig. In/out 1 / or S1.08	– Sign (direction) digital set values
4	Digital set value 2 (S1.02)	Dig. In/out 2	+ Sign (direction) digital set values
6	Digital set value 3 (depend. on mode S1.03 or S2.01)	Dig. In/out 3	Digital set value 4 (depend. on mode S1.04 or S2.02)
8	Enable (DI 1)	Reserved	Digital set value 1 (S1.01)
10	Sensor 1 U_E, I_E,(FB 1)	Analog output	RxD (RS232, RS485)
12	Analog set value 6 U_E+ (S1.06)	TxD (RS232, RS485)	Analog set value 5 U_E+ (S1.05)
14	Error (DO 1)	Comparator (DO 2)	Sensor 2 U_E (FB 2)
16	Analog set value 6 U_E- (S1.06)	Reserved	Analog set value 7 I_E (S1.07)
18	Digital GND	PE	Ramp = 0 (DI 2)
20	Reference output - 10.0 V	Break output 24 V / 1 A	Reference output + 10.0 V
22	Solenoid output A -	Solenoid output A -	Solenoid output A -
24	Solenoid output B -	Solenoid output B -	Solenoid output B -
26	0 V (Power)	0 V (Power)	Analog GND
28	Solenoid output A +	Solenoid output A +	Solenoid output A +
30	Solenoid output B +	Solenoid output B +	Solenoid output B +
32	+ 24 V (Power)	+ 24 V (Power)	24 V (External)

Diagram of operation modes

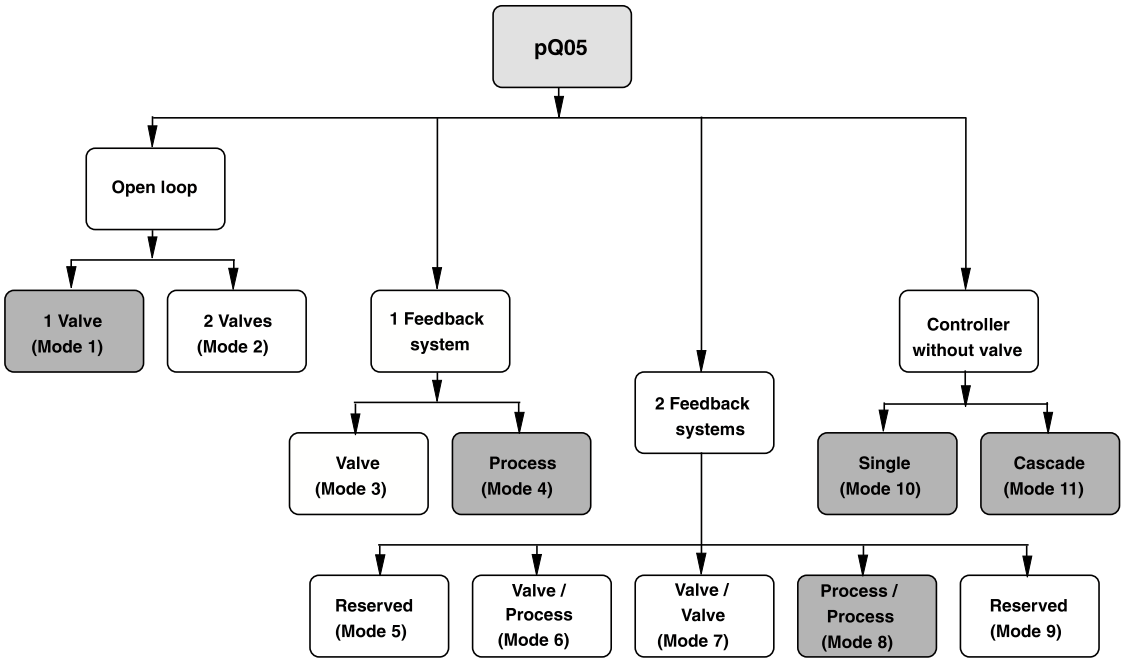

The following pages show only the operation modes with order numbers.

Our policy is one of continuous research and development. We therefore reserve the right to amend, without notice, the specifications given in this document.

Mode 1; Type 5988197

Open loop, 1 valve
(For only 1 proportional valve must used solenoid B (connector B– and B+))

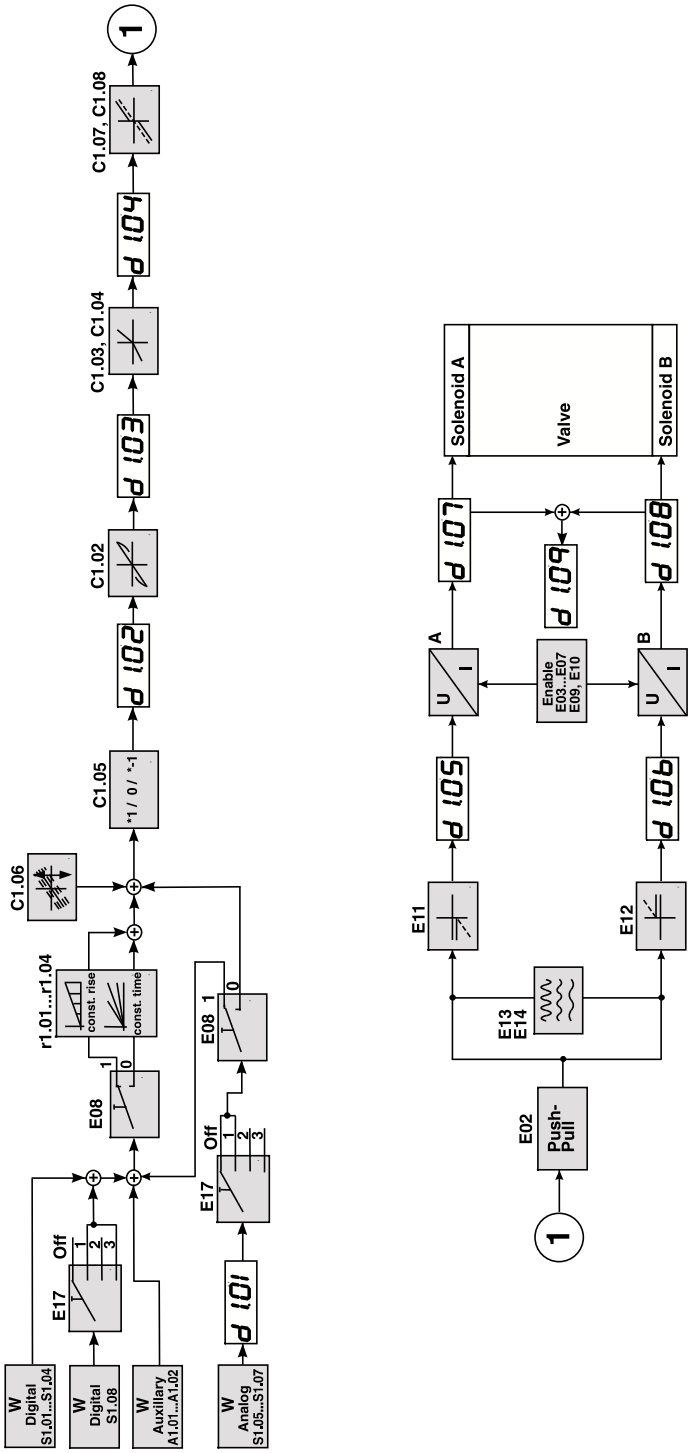

Our policy is one of continuous research and development. We therefore reserve the right to amend, without notice, the specifications given in this document.

Mode 4; Type 5988198

Single closed loop, process control loop system
(For only 1 proportional valve must used solenoid B (connector B– and B+))

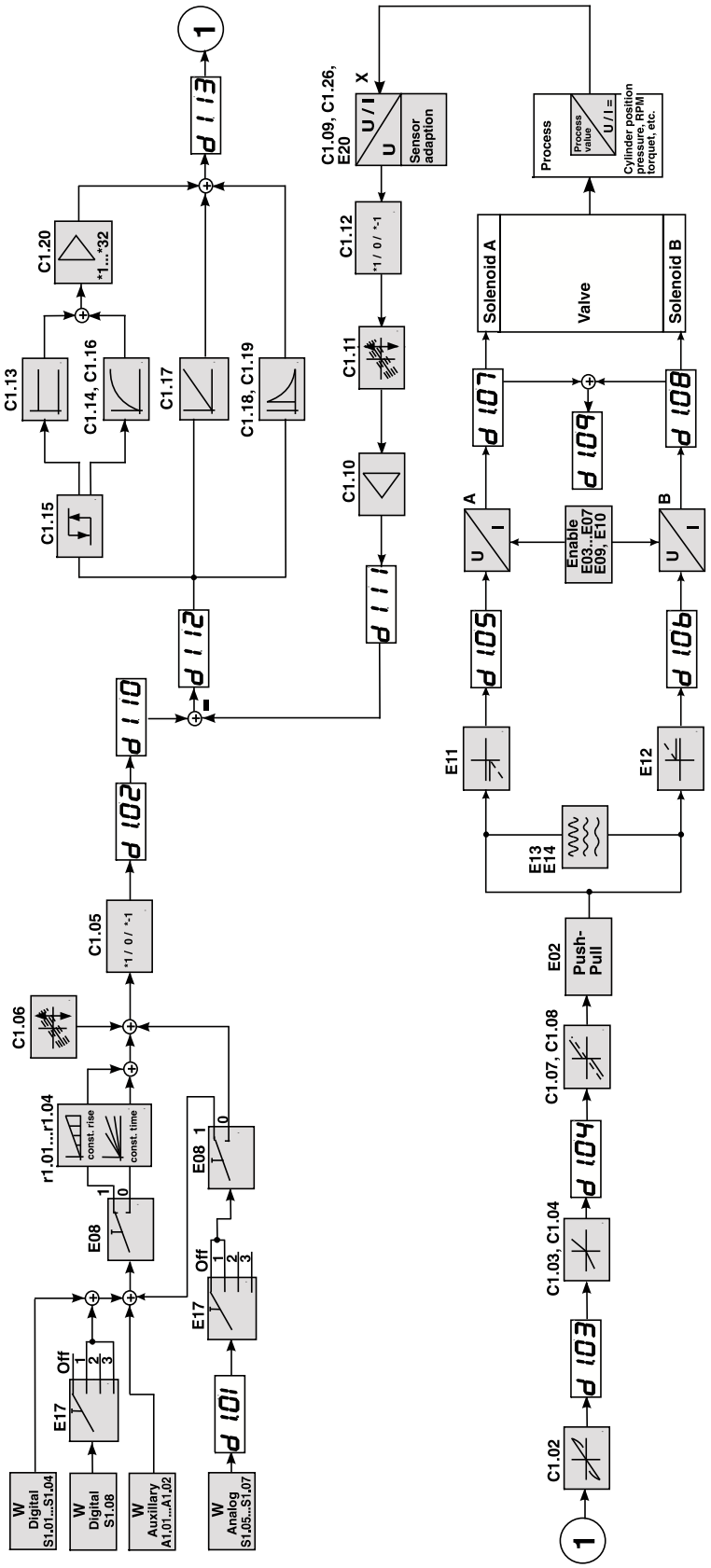

Our policy is one of continuous research and development. We therefore reserve the right to amend, without notice, the specifications given in this document.

Mode 8; Type 5988199

Double closed loop, 2 valves with a process control loop system

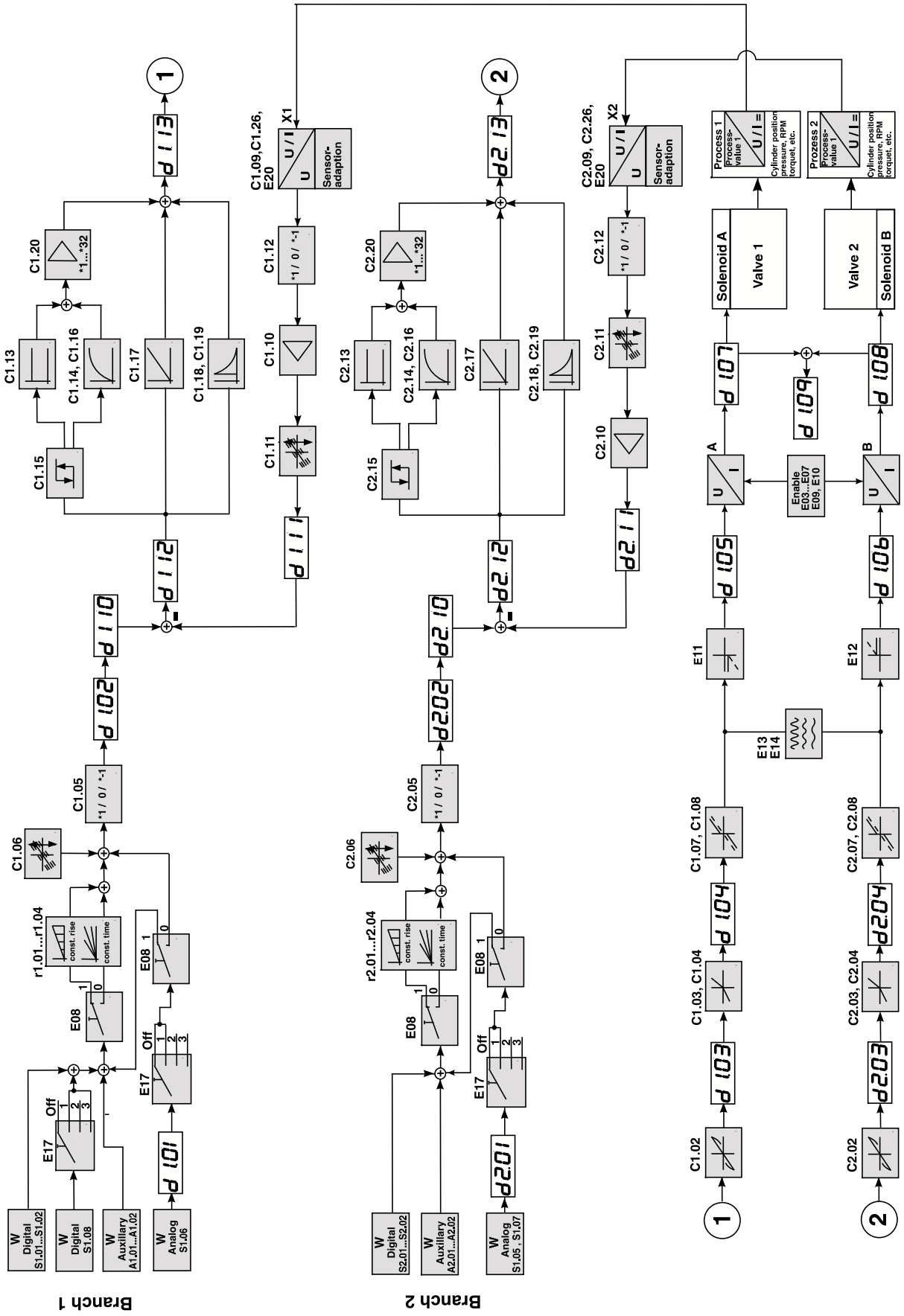

Our policy is one of continuous research and development. We therefore reserve the right to amend, without notice, the specifications given in this document.

Mode 10; Type 5988200

Controller without valve, single

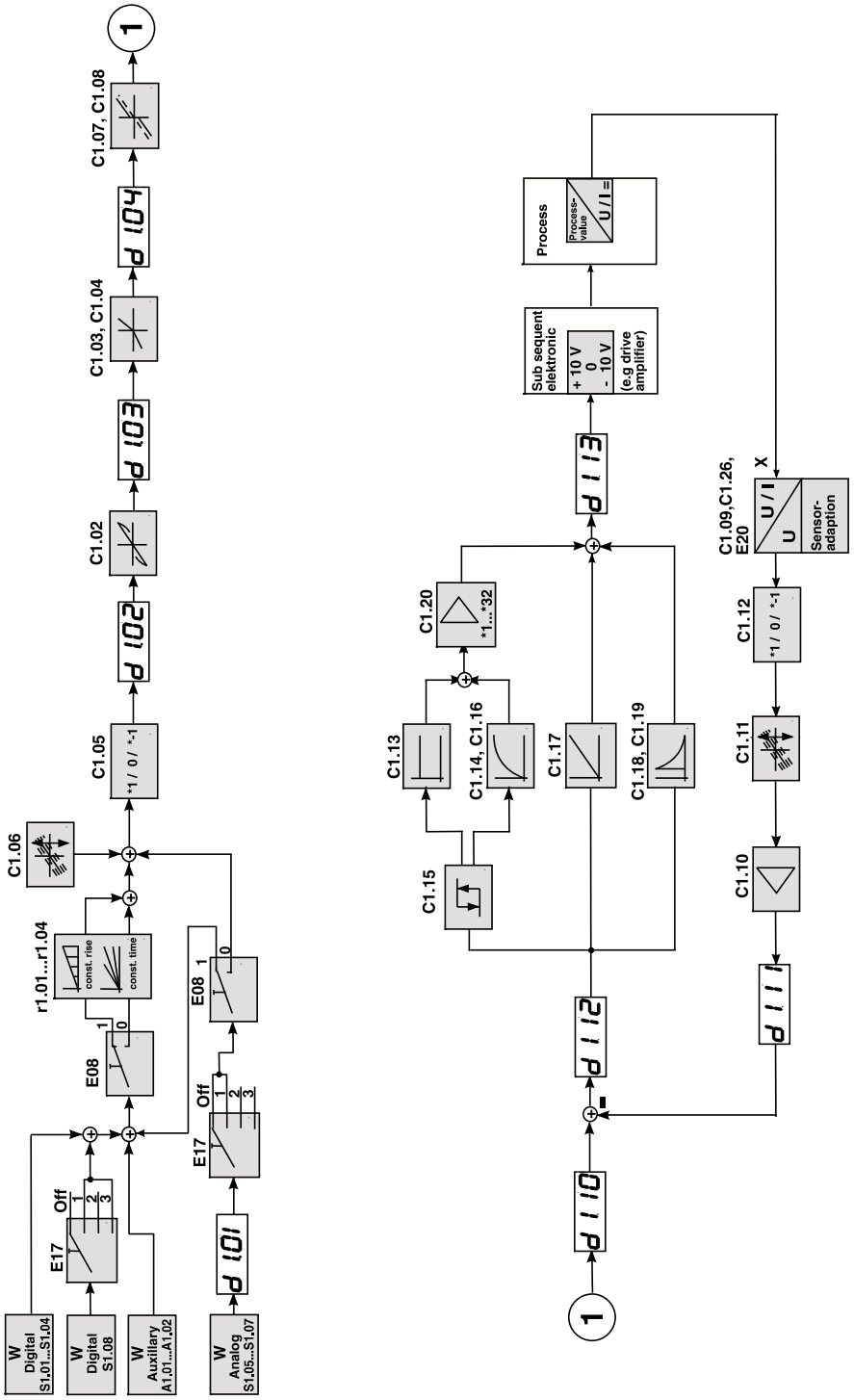

Our policy is one of continuous research and development. We therefore reserve the right to amend, without notice, the specifications given in this document.

Mode 11; Type 5988201

Controller without valve, cascade

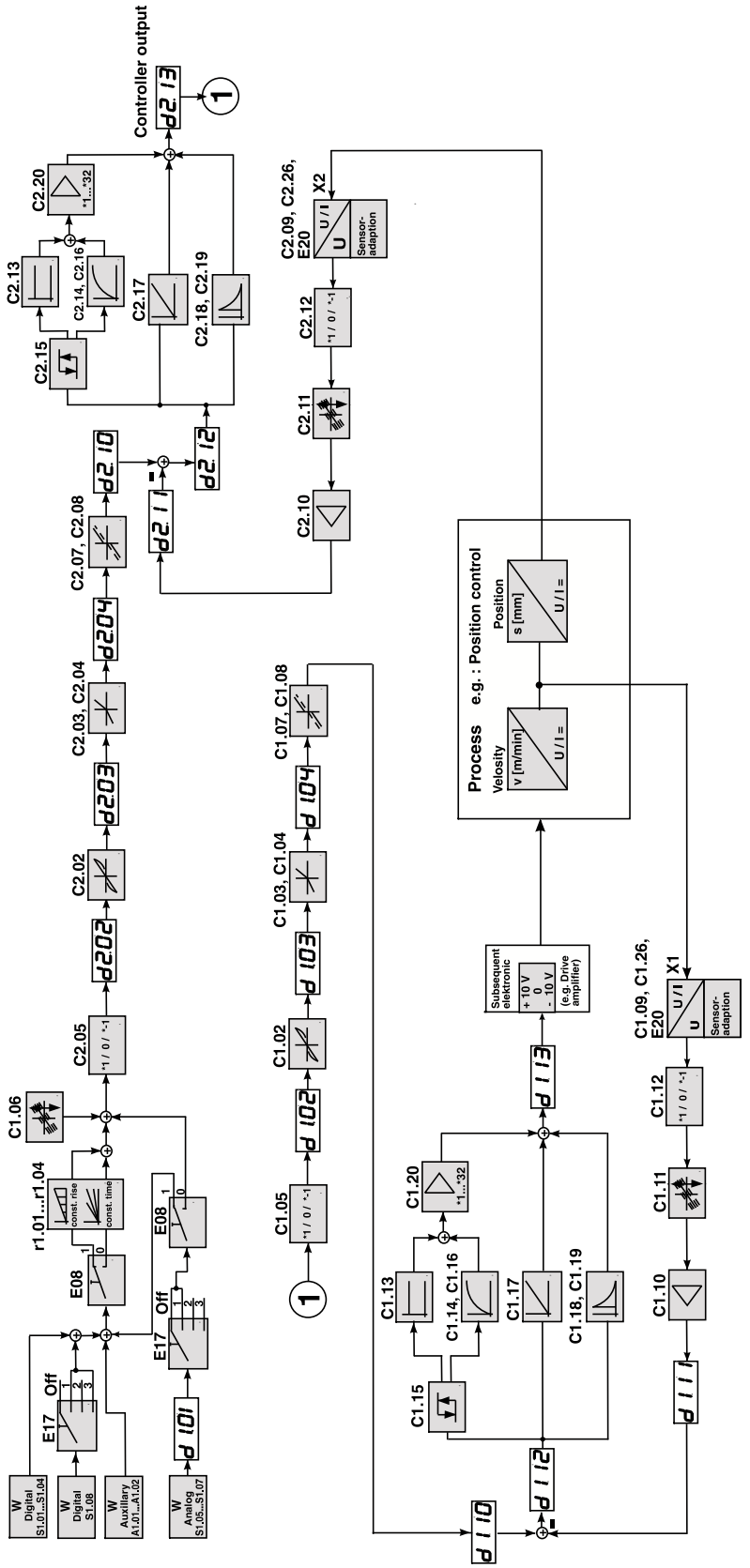

Our policy is one of continuous research and development. We therefore reserve the right to amend, without notice, the specifications given in this document.

Parameters list

Display-Parameters: Branch 1							
#	Function	Unit	Step	Min	Max	Custom-designed value	
d1.01	Sum of analogue set value	V	0.001	-9.999	+9.999		
d1.02	Sum of all post ramp set values	V	0.001	-9.999	+9.999		
d1.03	Set values after linearisation	V	0.001	-9.999	+9.999		
d1.04	Value after gain adjustment	V	0.001	-9.999	+9.999		
d1.05	Signal A	---	0.001	-9.999	+9.999		
d1.06	Signal B	---	0.001	-9.999	+9.999		
d1.07	Current A	A	0.001	0.000	5.000		
d1.08	Current B	A	0.001	0.000	5.000		
d1.09	Total current	A	0.001	0.000	5.000		
d1.10	Desired value	V	0.001	-9.999	+9.999		
d1.11	Actual value, feedback value	V	0.001	-9.999	+9.999		
d1.12	Lag error	V	0.001	-9.999	+9.999		
d1.13	Controller output	V	0.001	-9.999	+9.999		
Display-Parameters: Branch 2							
d2.01	Sum of analogue set value	V	0.001	-9.999	+9.999		
d2.02	Sum of all post ramp set values	V	0.001	-9.999	+9.999		
d2.03	Set values after linearisation	V	0.001	-9.999	+9.999		
d2.04	Value after gain adjustment	V	0.001	-9.999	+9.999		
d2.10	Desired value	V	0.001	-9.999	+9.999		
d2.11	Actual value, feedback value	V	0.001	-9.999	+9.999		
d2.12	Lag error	V	0.001	-9.999	+9.999		
d2.13	Controller output	V	0.001	-9.999	+9.999		
Set value parameters: Digital set values branch 1							
S1.01	Internal set value 1	V	0.001	0.000	+9.999		
S1.02	Internal set value 2	V	0.001	0.000	+9.999		
S1.03	Internal set value 3	V	0.001	0.000	+9.999		
S1.04	Internal set value 4	V	0.001	0.000	+9.999		
S1.08	Internal set value 8	V	0.001	0.000	+9.999		
Ramp parameters for set values branch 1							
r1.01	Ramp from 0 ⇒ –	s	0.01	00.00	39.50		
r1.02	Ramp from – ⇒ 0	s	0.01	00.00	39.50		
r1.03	Ramp from 0 ⇒ +	s	0.01	00.00	39.50		
r1.04	Ramp from + ⇒ 0	s	0.01	00.00	39.50		
Auxillary-Parameters: Branch 1							
A1.01	Set value simulation 1 branch 1	V	0.001	-9.999	+9.999		
A1.02	Set value simulation 2 branch 1	V	0.001	-9.999	+9.999		
Set value parameters: Digital set values branch 2							
S2.01	Internal set value 1	V	0.001	0.000	+9.999		
S2.02	Internal set value 2	V	0.001	0.000	+9.999		
Ramp parameters for set values branch 2							
r2.01	Ramp from 0 ⇒ –	s	0.01	00.00	39.50		
r2.02	Ramp from – ⇒ 0	s	0.01	00.00	39.50		
r2.03	Ramp from 0 ⇒ +	s	0.01	00.00	39.50		
r2.04	Ramp from + ⇒ 0	s	0.01	00.00	39.50		
Auxillary-Parameter: Branch 2							
A2.01	Set value simulation 1 branch 2	V	0.001	-9.999	+9.999		
A2.02	Set value simulation 2 branch 2	V	0.001	-9.999	+9.999		
Controller parameters: Branch 1							
C1.00	Controller selection	---	1	0	4		
C1.01	Safety function	---	---	0	1		
C1.02	Linearisation	---	1	0	5		
C1.03	Gain A	V/V	00.01	00.00	02.00		
C1.04	Gain B	V/V	00.01	00.00	02.00		
C1.05	Set value sign	---	---	- 1	+ 1		
C1.06	Set value offset	V	0.001	-9.999	+9.999		
C1.07	Dead band compensation A	V	0.001	0.000	+9.999		
C1.08	Dead band compensation B	V	0.001	0.000	+9.999		
C1.09	Sensor type	---	1	1	12		
C1.10	Actual value gain	V/V	00.01	00.00	02.00		
C1.11	Actual value offset	V	0.001	-9.999	+9.999		
C1.12	Actual value sign	---	---	- 1	+ 1		
C1.13	P-Portion KP1	V/V	00.01	00.00	04.00		
C1.14	T-Portion for PT1 (to C1.16)	S	00.01	00.00	04.00		
C1.15	Threshold (C1.13 / C1.16)	V	0.001	0.000	+9.999		

Our policy is one of continuous research and development. We therefore reserve the right to amend, without notice, the specifications given in this document.

Parameters list

Controller parameters: Branch 1							
#	Function	Unit	Step	Min	Max	Custom-designed value	
C1.16	P-Portion KP2	V/V	00.01	00.00	04.00		
C1.17	I-Portion	V/s	0.001	0.000	4.000		
C1.18	D-Portion	Vs	00.01	00.00	04.00		
C1.19	T-Portion for DT1	S	00.01	00.00	10.00		
C1.20	Gain (C1.13 and C1.16)	V/V	2^n	1	32		
C1.21	Comparator upper level	V	0.001	-9.999	+9.999		
C1.22	Comparator lower level	V	0.001	-9.999	+9.999		
C1.23	Comparator delay into window	S	00.01	00.00	+99.99		
C1.24	Comparator delay out of window	S	00.01	00.00	+99.99		
C1.25	Comparator selection	---	1	0	3		
C1.26	Cable fracture detection feedback	---	---	off	1		
Controller parameters: Branch 2							
C2.00	Controller selection	---	1	0	4		
C2.01	Safety function	---	---	0	1		
C2.02	Linearisation	---	1	0	5		
C2.03	Gain A	V/V	00.01	00.00	02.00		
C2.04	Gain B	V/V	00.01	00.00	02.00		
C2.05	Set point sign	---	---	- 1	+ 1		
C2.06	Set point offset	V	0.001	-9.999	+9.999		
C2.07	Dead band compensation A	V	0.001	0.000	+9.999		
C2.08	Dead band compensation B	V	0.001	0.000	+9.999		
C2.09	Sensor type	---	1	1	12		
C2.10	Actual value gain	V/V	00.01	00.00	02.00		
C2.11	Actual value offset	V	0.001	-9.999	+9.999		
C2.12	Actual value sign	---	---	- 1	+ 1		
C2.13	P-Portion KP1	V/V	00.01	00.00	04.00		
C2.14	T-Portion for PT1 (to C2.16)	S	00.01	00.00	04.00		
C2.15	Threshold (C2.13 / C2.16)	V	0.001	0.000	+9.999		
C2.16	P-Portion KP2	V/V	00.01	00.00	04.00		
C2.17	I-Portion	V/s	0.001	0.000	4.000		
C2.18	D-Portion	Vs	00.01	00.00	04.00		
C2.19	T-Portion for DT1	S	00.01	00.00	10.00		
C2.20	Gain (C2.13 and C2.16)	V/V	2^n	1	32		
C2.21	Comparator upper level	V	0.001	-9.999	+9.999		
C2.22	Comparator lower level	V	0.001	-9.999	+9.999		
C2.23	Comparator delay into window	S	00.01	00.00	+99.99		
C2.24	Comparator delay out of window	S	00.01	00.00	+99.99		
C2.25	Comparator selection	---	1	0	3		
C2.26	Cable fracture detection feedback	---	---	off	1		
Extended-Parameters: Basic adjustments							
E00	Operation mode Note: 5 = Reserved and 9 = Reserved	---	1	1	11		
E01	Analogue output	---	1	1 = d1.01 and 14 = d2.01	13 = d1.13 and 21 = d2.13		
E02	Push-Pull function	---	---	off	1		
E03	Solenoid selection	---	---	0.800	3.500		
E04	P-Portion current contr. energisation	---	0001	0000	9999		
E05	I-Portion current contr. energisation	---	0001	0000	9999		
E06	P-Portion current contr. de-energisation	---	0001	0000	9999		
E07	I-Portion current contr. de-energisation	---	0001	0000	9999		
E08	Ramp selection	---	1	0	2		
E09	Time delay enable signal	s	0.001	0.000	+9.999		
E10	Solenoid current adaption	---	00.01	00.50	01.10		
E11	Initial current	V	0.001	0.000	+3.000		
E12	Initial current	V	0.001	0.000	+3.000		
E13	Dither Amplitude	V	0.001	0.000	+3.000		
E14	Dither Frequency	Hz	0001	0001	0300		
E15	Select load/store	---	1	0	1		
E16	Action load/store	---	1	0	1		
E17	Set value activation mode	---	1	off, 1	3		
E18	Break output	---	1	off, 1	5		
E19	Output factor analogous output	---	00.01	00.00	02.00		
E20	Swap feedback branch 1 / branch 2	---	1	0	1		
E21	Password	---	0001	0000	9999		

Our policy is one of continuous research and development. We therefore reserve the right to amend, without notice, the specifications given in this document.

Instructions for ordering, installation and commissing

Correct product use
The pQ05 amplifier cards are used for the following:
- Controlling and regulation of proportional and servo valves (pressure, directional control and flow valves).
- Implementation of control loops with feedback of process parameters (pressure, stroke, speed, etc.).
- Realisation of cascade controllers to control at one time the aforementioned valves and process parameters.
- To convert set point signals into a current signal to control the proportional solenoids in the aforementioned valves.

The operation of other inductive or resistive loads is not recommended (motors, heaters, etc.).
If used correctly, the safety of the user as well as the safe and proper function of the amplifier card is guaranteed.

Warnings
The amplifier cards should not be used in the following cases:
- if noticeably damaged
- when the electrical connections are damaged
- if they do not function correctly
- after incorrect handling or storage

In these cases, the amplifier card must be disabled and secured against accidental restarting.
In the case of applications with critical safety requirements or where accident prevention regulations must be observed, it may be necessary to isolate the components from the solenoids with relays in e-stop circuits.
To switch off the "enable" signal (0 V at input 8d) is insufficient. In these cases, hydraulic and/or mechanical safety measures to stop the drive must be provided (e.g. through switching valves with position monitoring).
If the solenoids must be switched off, the following sequence is recommended:
- All set points should preferably be set to 0. A resistance of 20 Ohm and nominal loading capacity of 30 W must be switched into the electric circuit in place of the solenoids (max. flowing current approx. 1 A). This prevents amplifier faults through open inputs and outputs.
- Disable the amplifier during the switching process (enable = 0).

During commissioning, particular attention must be paid to the correct design and realisation of the wiring. This must be checked before applying the supply voltage.
To avoid collisions, the safety devices and limit switches must be activated. All the safety regulations are to be observed.
Monitoring the fault signal (pin 14d) is recommended.
Malfunctions can occur with the following:
- Changes to the settings made by the supplier.
- Neglection of operating parameters (e.g. supply voltage, application of inadmissible signals on inputs or outputs, ambient conditions, wiring, unsafe loads such as motors, contactors, relays, ohm loads, etc.)
- Faults in series-connected controls components and set points or actual values
- Faults in the subsequent hydraulic components
- Removing of solenoids connections.

Inquiries and ordering
To order the product, the complete order code is requested (see section order code overview).
Please forward orders and enquiries to:

IMI Norgren-Herion Fluidtronic GmbH & Co. KG
Föhrenbachstrasse 1
D-73630 Remshalden
Tel.: +49 (0)7 151 / 70 88-0
Fax: +49 (0)7 151 / 70 88-55

Abroad:
Your local representative dealer or agent is competent for all inquiries, ordering and repairs.

Service and repair
Do not attempt to repair the product yourself. After repair, certain adjustments and test procedures must be performed, which can only be made by qualified and authorised personnel. Products that need repair can be sent to the addresses under inquiries and orders.
Please enclose a detailed description of the error, malfunction or failure with the sent item and state the serial number and the purchase date. This will speed up the process and guarantees a fast and reliable repair.
In the case of a fault or a malfunction, your Norgren-Herion distributor can give you instructions on the phone or in writing before accepting a repair order.

Cleaning, starage, transport
The product should only be transported and stored in the original packaging to ensure suitable protection against mechanical damage as well as electrostatic discharge. It is not advisable to transport the amplifier when installed, e.g. in a cabinet.
If it should be necessary to clean the amplifier, we recommend sending it back to the manufacturer (see address under inquiries and orders).

Delivery state (default setting)
The product is shipped in a ready-to-use state (default settings). After correct installation and programming of the parameters for the application, the amplifier card is ready for use.

Our policy is one of continuous research and development. We therefore reserve the right to amend, without notice, the specifications given in this document.

Our policy is one of continuous research and development. We therefore reserve
the right to amend, without notice, the specifications given in this document.