HT84T - 3/2 shut-off valve
For Extreme Temperature applications
Excelon® Plus Modular System

- Port size: 3/8" ... 3/4" (ISO G/PTF)
- Excelon® Plus design allows in-line installation or modular installation with other Excelon® Plus products
- 3/2 way function
- Threaded exhaust port
- Lockable in closed position with padlock
- Salt Spray compliant to ISO 9227
- ABS cover with High impact properties

+80°C (+176°F)
-20°C (-4°F)

Technical features

Medium:
Compressed air only
Maximum supply pressure:
20 bar (290 psi)
Port size:
G3/8, G1/2, G3/4,
3/8 PTF, 1/2 PTF, 3/4 PTF

Flow:
From IN to OUT ports:
1/2": 162 dm³/s at 6,3 bar and Δp 0,5 bar pressure drop,
1,8 dm³/s from OUT to exhaust port.
Atex:
Shut-off valves HT84 are in conformity with Atex 2014/34/EU
II 2 GD
Ex h IIC T6 Gb
EX h IIIC T85°C Db

Ambient/Media temperature:
-20°... +80°C (-4° ...+176°F) Air supply must be dry enough to avoid ice formation at temperatures below +2°C (+35°F).

Materials:
Body: Die cast aluminium
Body covers: ABS (Magnum 3904)
Elastomers: NBR

Technical data HT84T - standard models

Symbol	Port size	Function	Valve type	Exhaust port forms	Weight (kg)	Model
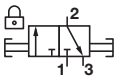	G3/8	3/2	Ball valve	Exhaust port threaded G1/4	0,48	HT84T-3GA-B1N
	G1/2	3/2	Ball valve	Exhaust port threaded G1/4	0,48	HT84T-4GA-B1N
	G3/4	3/2	Ball valve	Exhaust port threaded G1/4	0,48	HT84T-6GA-B1N

Option selector

HT84T-★★A-B1N

Function	Substitute
3/2	T

Thread form	Substitute
PTF	A
ISO G parallel (standard)	G

Port size	Substitute
3/8"	3
1/2"	4
3/4"	6

Accessories

Wall mounting bracket

Page 6

840024-50KIT

Quikclamp®

Page 6

H840014-51KIT

Quikclamp® with bracket assembled

Page 6

H840014-52KIT

Port Adaptors

Page 7

3/8 PTF	H840015-02KIT
1/2 PTF	H840015-03KIT
3/4 PTF	H840015-04KIT
G3/8	H840015-10KIT
G1/2	H840015-11KIT
G3/4	H840015-12KIT

Hybrid Quikclamp® *1

Page 6

840014-61

Hybrid Quikclamp® with bracket assembled *1

Page 6

840014-62

Pressure sensing block 1/4 PTF

Page 6

H840016-50KIT

Pressure sensing block G1/4

Page 6

H840016-51KIT

*1) To connect new Excelon Plus to old Excelon 74/73 units. Having the same hole centres as 74 series mounting bracket. A Quikclamp adds 13.6 mm to the overall width of a combination unit

Full flow porting block 3/4" PTF

Page 6

H840028-50KIT

Full flow porting block G3/4

Page 6

H840028-53KIT

Full flow porting block 3/4" PTF

Page 6

H840028-68KIT

Full flow porting block G3/4

Page 6

H840028-69KIT

Pressure switch interface block (18D pressure switch) G1/4

Page 8

0337717000000000

Pressure switch 18D (0,5 ... 8bar) *4

Page 8

0881300

Digital pressure switch 51D (-1 ... 10 bar) *2

Page 8

0860810

*2) -20 ... +60°C (-4 ... +140°F)

*4) -10°... +85°C (-14° ...+185°F)

Padlock

Padlock

840055-01KIT

Lockout device

840055-02KIT

Silencer

Porous plastic silencer *3) G1/4

M/S2

Sinter bronce silencer *3) G1/4

T40C2800

Sinter bronce silencer *3) 1/4 PTF

MS002A

*3) Max. pressure of silencers listed in this data sheet : 10bar. For pressure higher than 10bar please contact Norgren

Dimensions

Dimensions in mm
Projection/First angle

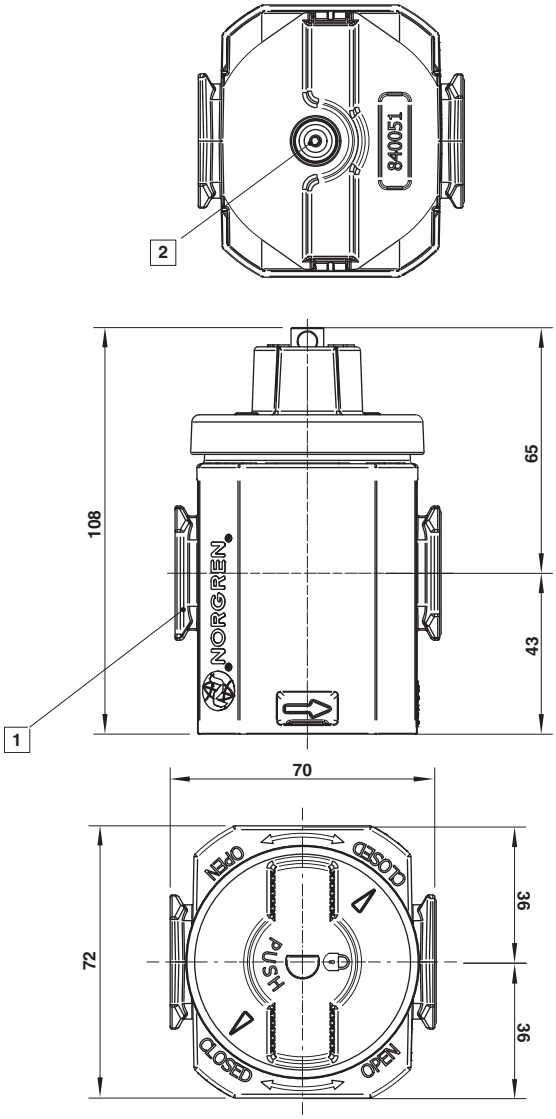

1 Main ports
3/8", 1/2" OR 3/4" ISO G/PTF
2 Exhaust Port G1/4 or 1/4 PTF

Accessories

Dimensions in mm
Projection/First angle

Quikclamp® with wall bracket

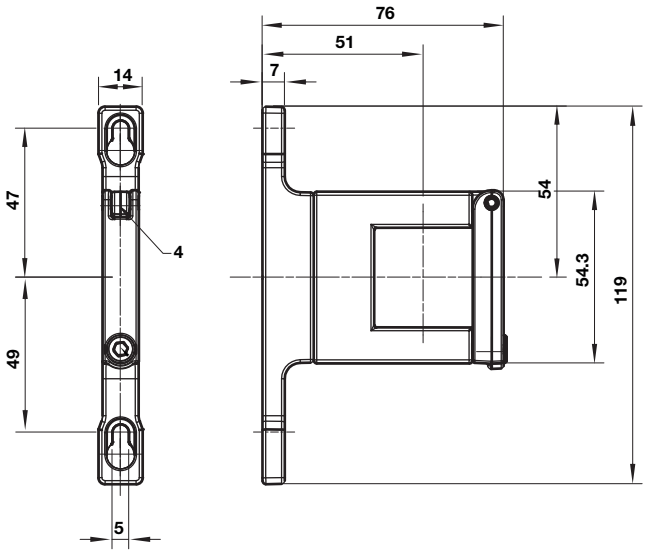

Quikclamp®

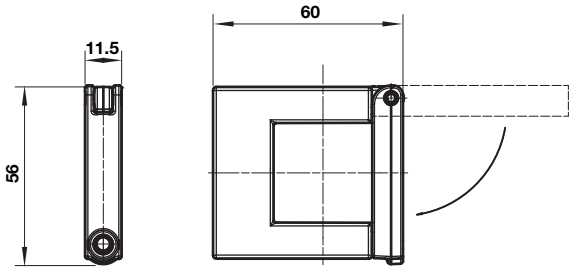

Hybrid-Quikclamp® with wall bracket

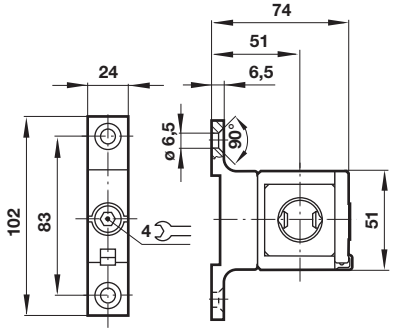

Hybrid-Quikclamp®

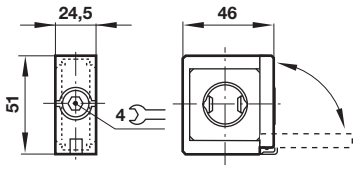

Connector 84-82 Series

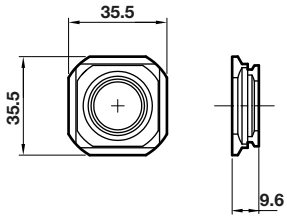

Mounting bracket

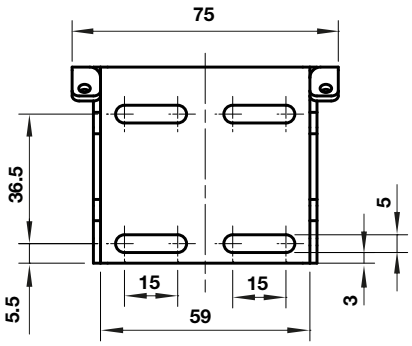

Pressure sensing block

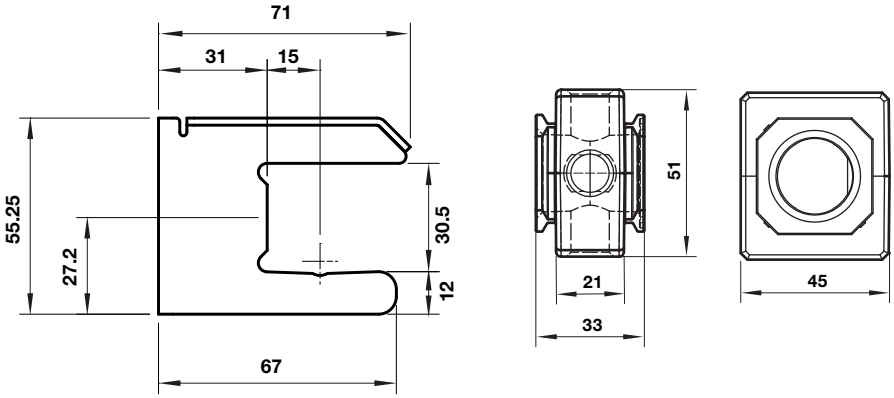

Full flow porting block horizontal

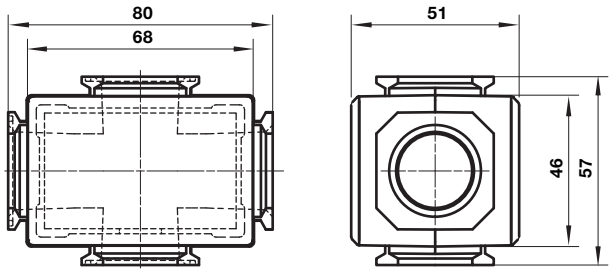

Full flow porting block vertical

Dimensions in mm
Projection/First angle

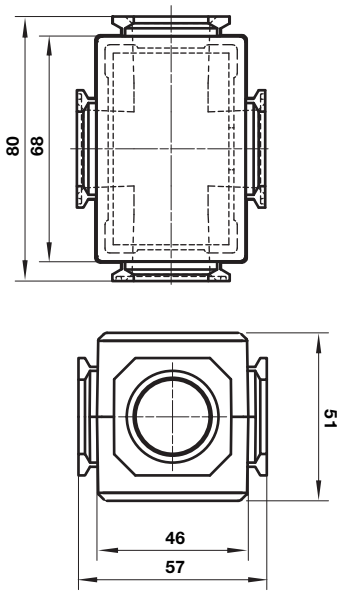

Porting block for 18D pressure switch

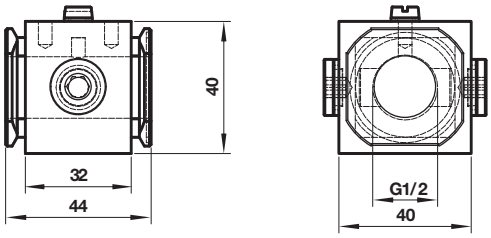

18D Pressure switch

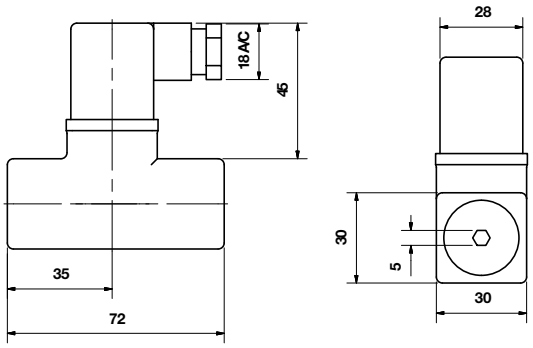

18D Porting block and 18D assembled

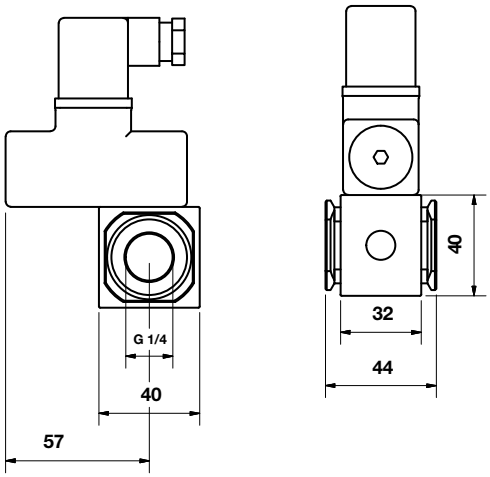

Pipe adaptor

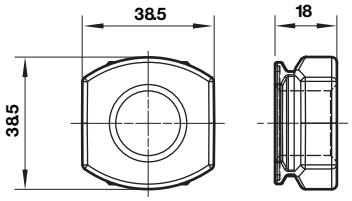

51D Pressure switch - digital

Dimensions in mm
Projection/First angle

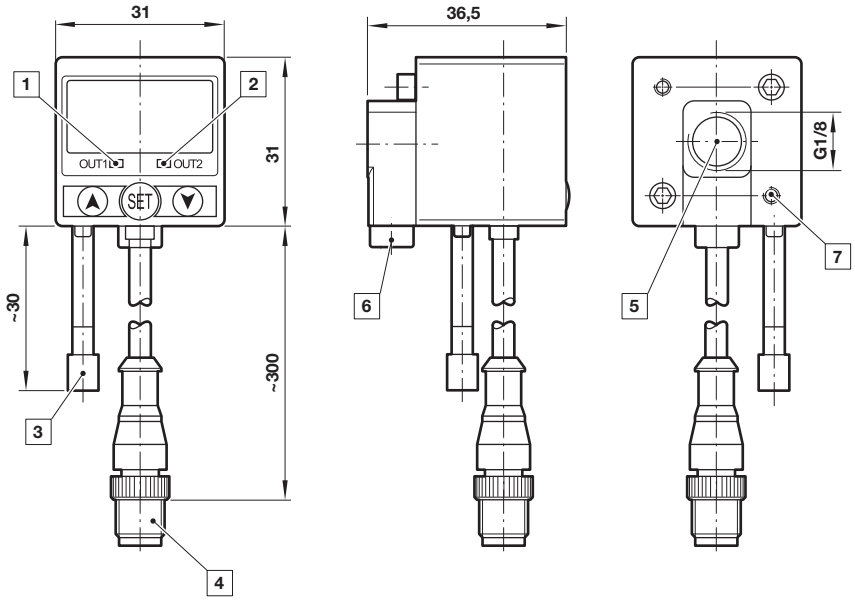

1 Switch OUT 1, green LED
2 Switch OUT 2, red LED
3 Dustproof protector
4 Connector M12 x 1
5 Inlet port
6 Alternative inlet port G1/8 plugged
7 Thread for mounting screw

Warning

These products are intended for use in industrial compressed air systems only. Do not use these products where pressures and temperatures can exceed those listed under »**Technical features/ data**«.
Before using these products with fluids other than those specified, for non-industrial applications, life-support systems or other applications not within published specifications, consult Norgren Ltd.

Through misuse, age, or malfunction, components used in fluid power systems can fail in various modes.

The system designer is warned to consider the failure modes of all component parts used in fluid power systems and to provide adequate safeguards to prevent personal injury or damage to equipment in the event of such failure.
System designers must provide a warning to end users in the system instructional manual if protection against a failure mode cannot be adequately provided.
System designers and end users are cautioned to review specific warnings found in instruction sheets packed and shipped with these products.