5/2 Air-Accumulator Control Valve

Nominal size 6
For double-acting cylinders
Solenoid pilot operated soft seal spool valve
NAMUR pattern flange mounting
G 1/4 internal thread connection

NORGREN HERION

Catalog Register
P 11

Publication 750**2222**.06.01.98

OBSOLETE DOCUMENT
Technical Reference Only

Description

Solenoid valve for filtered, lubricated[1] or non-lubricated compressed air, instrument air, nitrogen and other neutral fluids.

Temperature range:	See solenoid parameters
Operating pressure:	3.8 to 8 bar
Solenoid:	DC, AC or for intrinsically safe circuits
Mounting position:	Optional
Material:	
– Valve body:	Hard anodized aluminium/ stainless steel
– Seals:	AU/NBR

Features

- High flow rate
- Maintenance free
- Non-overlapping switching function – Exhaust air fully throttleable at port 5. Switching function guaranteed even with reduced sectional area of supply line.
- Safety position at operating pressure of approx. 2.6 bar
- Can be fitted with manual override, with or without lock.
- Suitable for use in exposed locations with severe environmental conditions.
- Minimal electrical power consumption – hence available in many different safety ratings, e.g. EEx ia IIC T6.
- Valve interior protected from contamination.
- Pilot valve protected from contamination by fluid.

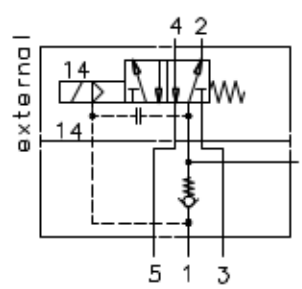

Flow direction fixed

5/2 Air-Accumulator Control Valve

[1] Oil recommendation: Shell Hydrol DO 32, ESSO Febis K 32 (as of July 1992) or comparable oils with DVI values < 8 (DIN 53521) and ISO viscosity class 32-46 (DIN 51519).

Valve parameters

Nom. size	Pipe connection 1 3 5	Pipe connection 2 4	Operating pressure [bar] min.	Operating pressure [bar] max.	Control pressure supply [bar]	k_v-value (C_v (US) ≈ k_v x 1.2)	Weight without solenoid [kg]	Dimensional drawing No.	Cat. No. Valve	Cat. No. Solenoid
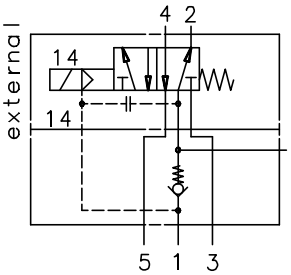										
6	G 1/4	Flange	3.8	8	3.8 to 8	0.9	1.0	01	**2636041.**[1]	See solenoid specifications

Safety cut-off function
When the operating pressure drops to around 2.6 bar the air accumulator valve is switched to neutral position by the action of the spring even with the solenoid energized. Combined with an appropriate accumulator volume which is maintained by the operating pressure, double-acting cylinders can be moved to a specified end position (safety position).

Cat. No. (example):

Valve	Solenoid
2636041.	**2032**

Add-on manual overrides

	
Without detent	With detent[2]
Cat. No. **0553886**	Cat. No. **0553887**

[1] 2 fixing bolts M5 x 35 DIN 912 A2/A4 included in delivery.
[2] Only for version equipped with one solenoid.

Solenoid parameters

Standard voltages 24 VDC, 230 VAC. Other voltages and designs available on request.
Designed in accordance with Specifications VDE 0580/VDE 0171, EN 50014/EN 50028.100 % duty cycle.

Illustration	Power consumption 24 VDC [W]	Power consumption 230 VAC [VA]	Rated current at 24 VDC [mA]	Rated current at 230 VAC [mA]	Tolerance rated voltage [%] +	Tolerance rated voltage [%] –	Protection class IP 00 without connector IP 65 with connector	Ambient temperature [°C]	Fluid temperature max. [°C]	Weight [kg]	Dimensional drawing No.	Circuit diagram No.	Cat. No.
	1.6	–	67	–	10	15	IP 00	–25 to +60	+80	0.14	05	01	**0253**[1]
	1.9	–	78	–	10	15	IP 00	–25 to +60	+80	0.3	04	01	**0763**[1]
	3.2	–	135	–	10	15	IP 65 EEx m II T4 Cable, 3 m long	–20 to +70	+70	0.4	03	04	**0278**[2]
	–	3.5	–	15	10	15					03	07	**0279**[2]
	0.7	–	29	–	10	20	IP 65 EEx me II T5 or T6	–20 to +80 (T5) –40 to +70 (T6)		0.8	02	04	**3900**[3]
	3.9	–	161	–	10	15	IP 65 EEx me II T5 or T6	–20 to +80 (T5) –40 to +60 (T6)		0.8	02	04	**3910**[3]
	–	4.9	–	21	10	15	IP 65 EEx me II T5 or T6	–20 to +80 (T5) –40 to +60 (T6)		0.8	02	07	**3911**[3]
	1.4	–	59	–	10	15	NEMA 4, 4X, 6, 6P, 7, 9 Stranded wire, 460 mm long	–20 to +60		0.5	06	01	**3720**[5]

For intrinsically safe circuits with safety ratings EEx ia IIC T6 and IP 65

Illustration	Nominal resistance R_V Coil [Ω]	Min. required switching current [mA]	Resistance $R_{W\,65}$ Coil[4] [Ω]	Required voltage at terminal $R_{W\,65}$ [V]	Ambient temperature [°C]	Fluid-temperature max. [°C]	Weight [kg]	Dimensional drawing No.	Circuit diagram No.	Cat. No.
	124	52	150	7.8	–40 to +65	+65	0.8	02	10	**2030**[6]
	159	45	193	8.7						**2031**[6]
	198	40	240	9.6						**2032**[6]
	248	36	301	10.9						**2033**[6]
	306	33	371	12.3						**2034**[6]
	378	30	458	13.8						**2035**[6]
	467	27	566	15.3						**2036**[6]
	566	25	686	17.2						**2037**[6]
	692	23	839	19.3						**2038**[6]

When selecting an intrinsically safe power supply, the permissible maximum values according to the Certificate of Conformity should be taken into account. The effective internal capacities and inductances of intrinsically safe solenoids are very low and can be ignored.

[1] Required connector for DC: Cat. No. **0570275**. Connector with rectifier for AC or universal current: Cat. No. **0663303**. Connector with LED and transparent housing: Cat. No. **0663035**.
[2] Certificate of Conformity KEMA No. Ex-93.C.8283 X
[3] Certificate of Conformity PTB No. Ex-92.C.2175 X
[4] $R_{W\,65}$ is the solenoid coil resistance at +65 °C ambient temperature and an applied voltage which produces an output of 2.8 W at +20 °C ambient temperature (max. permissible output from intrinsically safe circuits for above solenoids).
[5] CSA Certification No. LR 57643-6, FM approved, for hazardous locations: Div. 1 and 2, class I, II, III
[6] Certificate of Conformity PTB No. Ex-95.D.2178

Sectional drawing

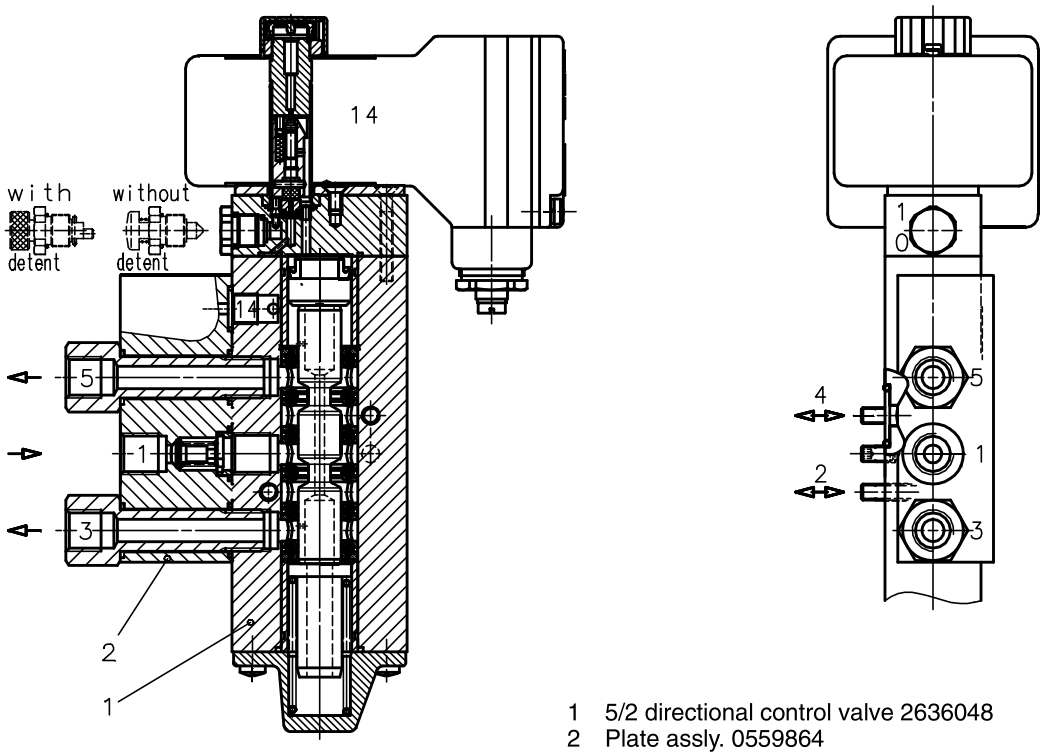

1 5/2 directional control valve 2636048
2 Plate assly. 0559864

O-rings, fixing bolts and coding stud included

Dimensional drawing [mm]

01

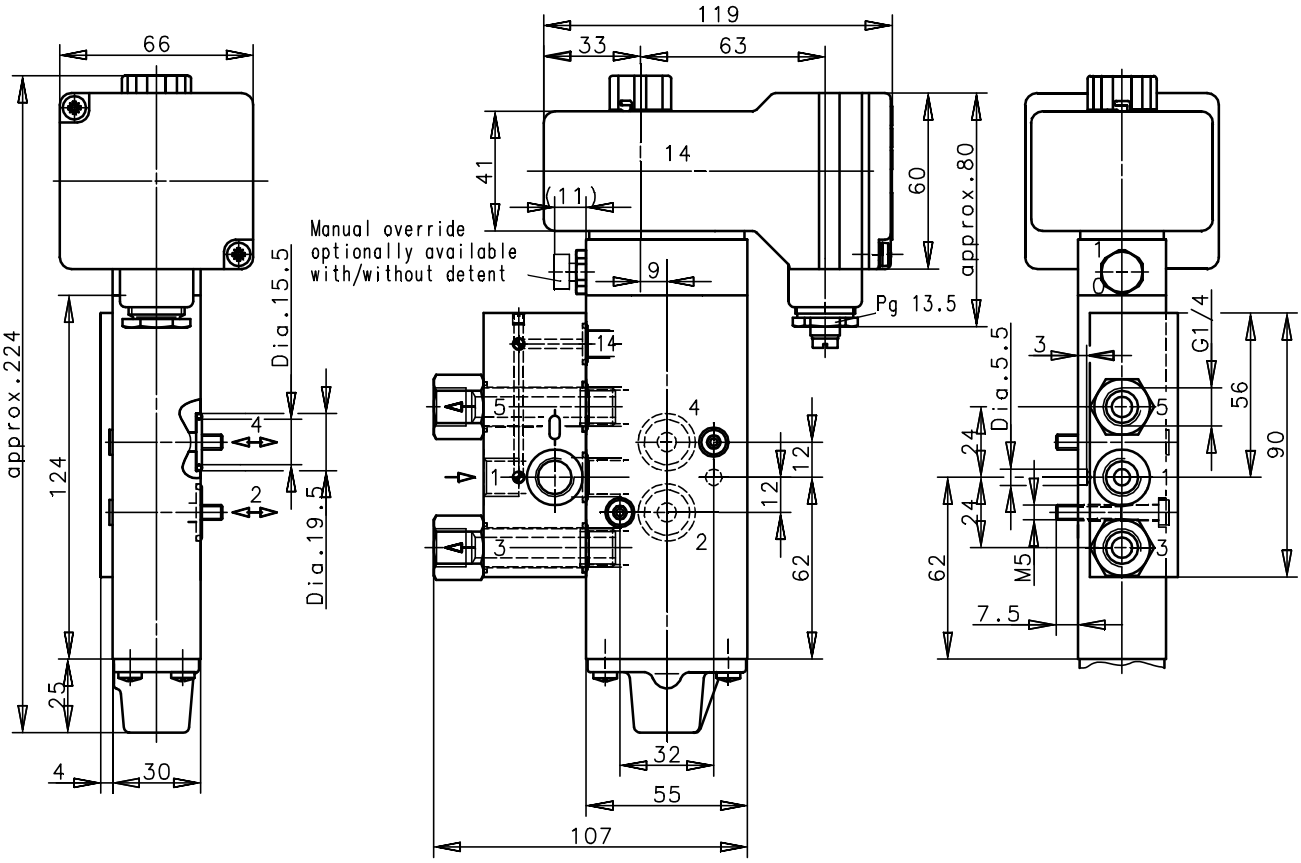

Dimensional drawings [mm]

02

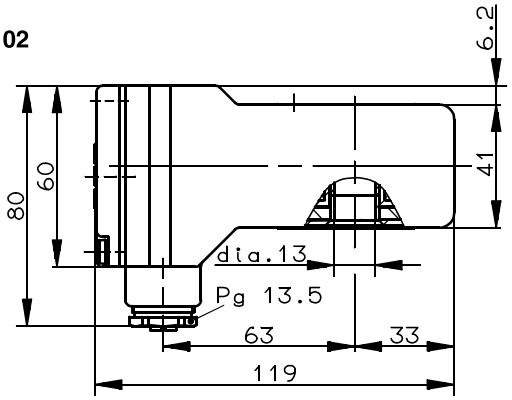

03

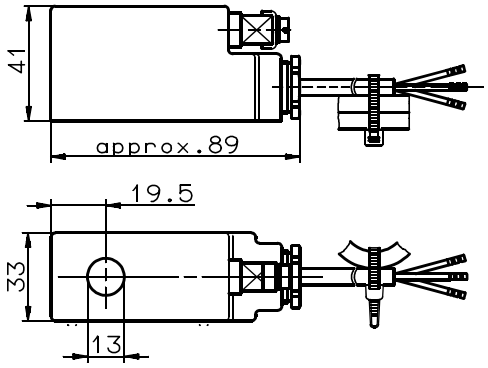

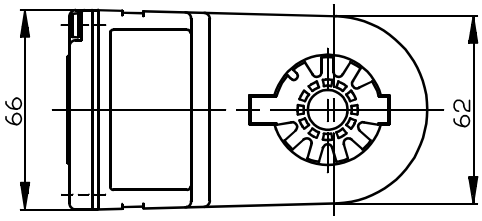

04

05

06

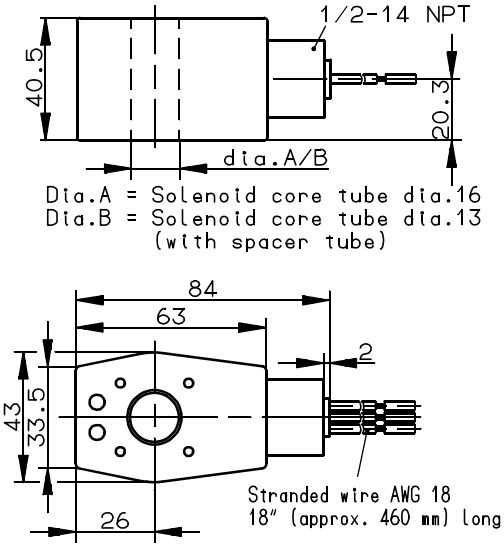

Electrical circuit diagram

01

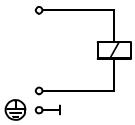

07

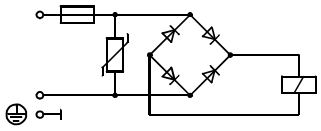

04

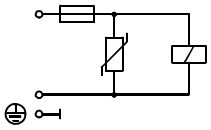

10