Auto In-plant

IMI NORGREN®

Tandem Line Tooling

Engineering GREAT Solutions

norgren.com/automationsolutions

IMI Precision Engineering

Engineering GREAT solutions

*We deliver **GREAT** solutions for our customers tackling the world's most demanding engineering challenges.*

IMI Precision Engineering is a world leader in motion and fluid control technologies. Wherever precision, speed and engineering reliability are essential, we deliver exceptional solutions which improve the productivity and efficiency of our customers' equipment.

Part of IMI plc, (listed on the London Stock Exchange since 1966), IMI Precision Engineering has $1,214m in sales generated from a sales and service network in 75 countries, as well as manufacturing capabilities in the USA, Germany, China, UK, Switzerland, Czech Republic, Mexico and Brazil. We support this with our global centers of technical excellence and facilities for CFD design and R&D testing. We employ a dedicated team of field engineers, sector specialists and key account managers – all committed to providing excellent service to our customers.

As a business, we aim to UNDERSTAND our customers' challenges. We then CONNECT our products, people and expertise in order to DELIVER exceptional service and solutions. Together these actions IMPROVE the performance of our customers' machinery.

We call this Engineering Great. We deliver it to customers through a world-class portfolio of high performance products, and strong partnerships for problem-solving utilizing our global network of support.

The IMI Precision Engineering Auto In-plant Team creates capacity by designing and manufacturing automation and tooling that optimize production throughput in the press room and other material handling applications.

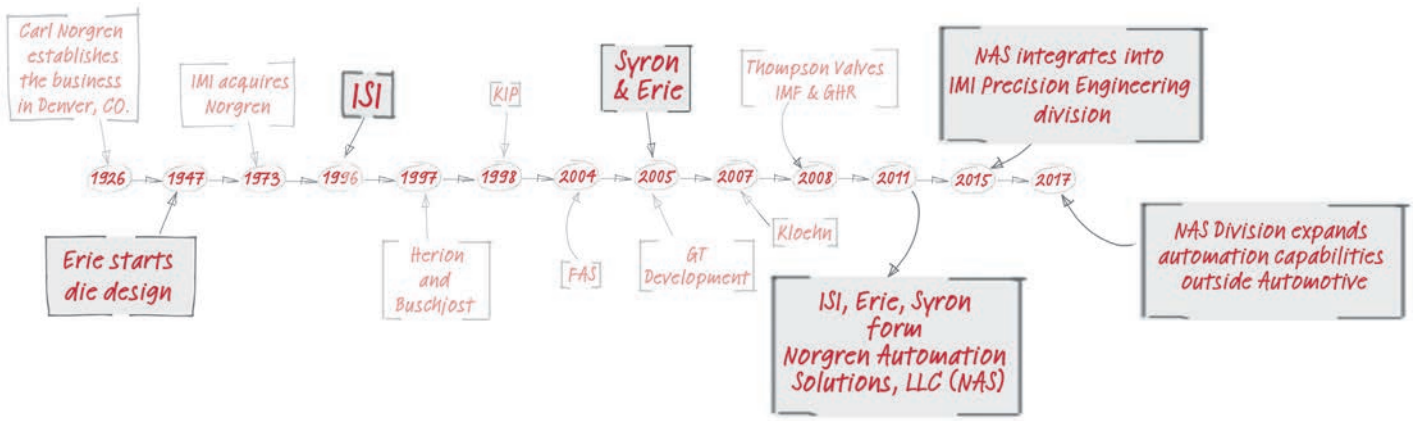

Contents

Tandem Tooling Catalog

1.800.272.4511
Insidesales@imi-precision.com
www.norgren.com/automationsolutions

1 TANDEM CONCEPTS
FAST FIND GUIDE PAGE 04

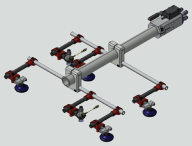

2 IDLE STATIONS
FAST FIND GUIDE PAGE 08

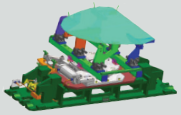

3 TOOLING CARTS
FAST FIND GUIDE PAGE 10

4 CARBON FIBER STRUCTURES
FAST FIND GUIDE PAGE 12

5 RECEIVERS AND ADAPTERS
FAST FIND GUIDE PAGE 14

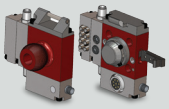

6 ROUND TOOLING
FAST FIND GUIDE PAGE 31

7 VACUUM AND ACCESSORIES
FAST FIND GUIDE PAGE 74

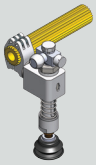

8 DOUBLE BLANK ANALYZER
FAST FIND GUIDE PAGE 96

Tandem Tooling Concepts

Through our 65 years of experience in Die Engineering and Press Room Automation, we provide an integrated tooling design that optimizes and stabilizes panel lift and transfer from Front of Line (FOL) to End of Line (EOL) of your Tandem Press.

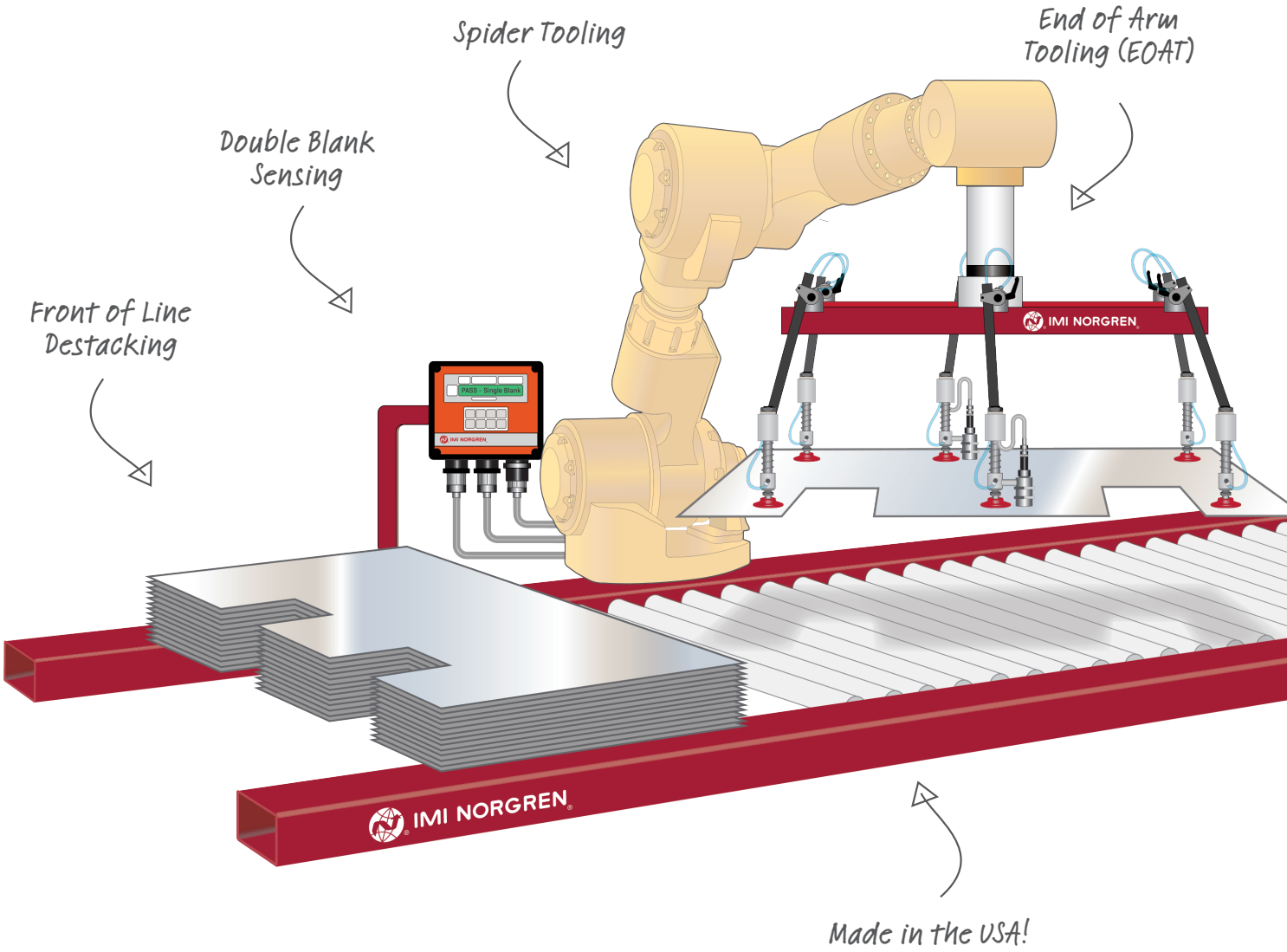

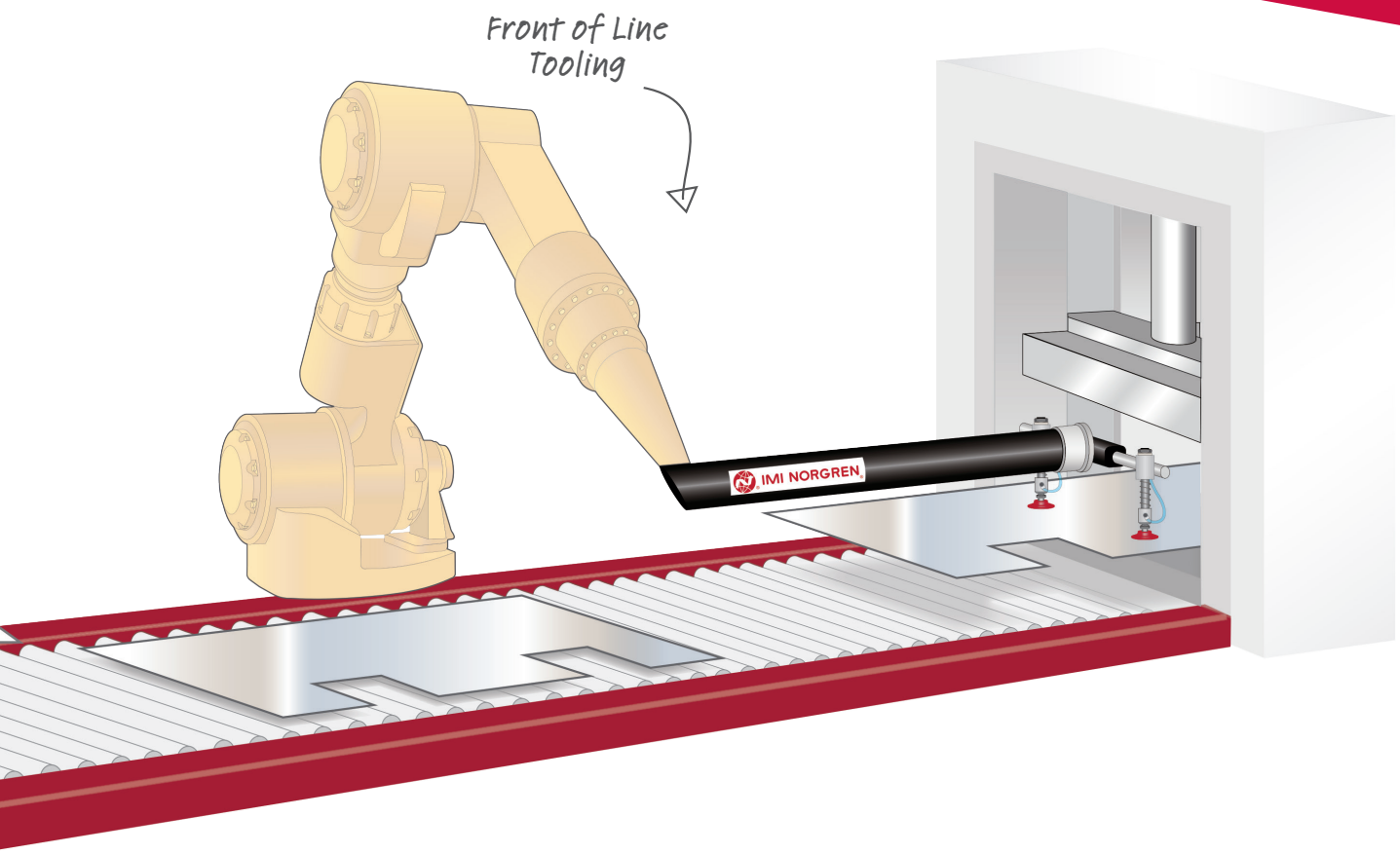

The IMI Norgren Applications Engineering Team:

- Maximizes throughput (strokes per minute, SPM) during loading of blanks and unloading of stamped parts
- Minimizes the cost of capital by overlaying blanks into the fewest possible panel size families
- Studies potential interference to prevent crashing, avoid downtime and costly repairs
- Designs the most efficient equipment design to reduce energy consumption and reduce footprint
- Provides options for reusing, repairing or recycling tooling to maximize program efficiency

NAS World Tool Concept

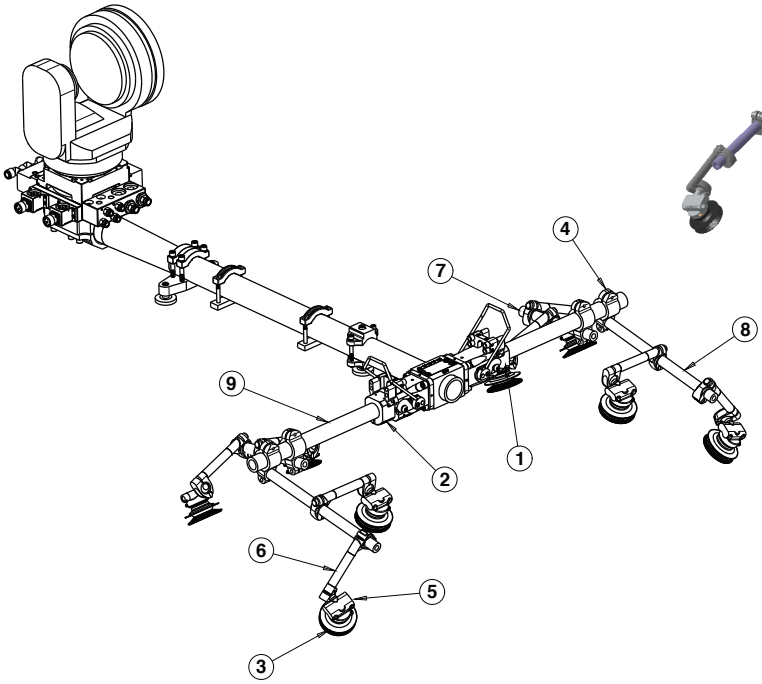

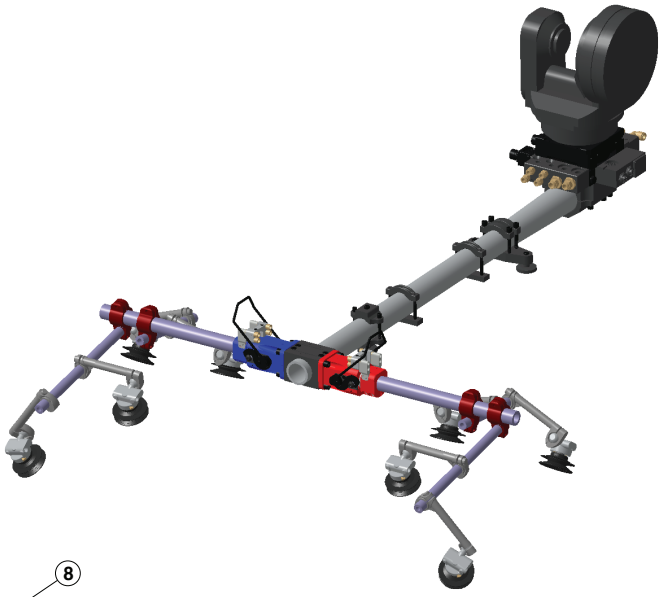

Reference number	Quantity	Part number	Description	Page reference
1	1	**LAA40091BN**	Mini bayonet 1.5" Tube 1 /4" NPT	26
2	1	**LAA40092BN**	Mini bayonet 1.5" Tube 1 /4" NPT	26
3	8	**CVC3**	Bellows vacuum cup	88
4	4	**LWTC10E15E**	Featherweight T- Clamp, 1.5" Tube to 1.0" Tube	69
5	8	**TLBB-0**	Twist-Lok Venturi	80
6	8	**XUMB- 1 -155**	1 X 155MM Ultra Arm	63
7	2	**Z-10-A-250**	Poz-E-Lok 1.0 Boom rod tubing	41
8	2	**Z-10-A-425**	Poz-E-Lok 1.0 Boom rod tubing	41
9	2	**Z-15-A-500**	Poz-E-Lok 1.5 Boom rod tubing	44
10	1	**Air fittings / Air lines**	Not shown	

T-Boom with Master Mounts

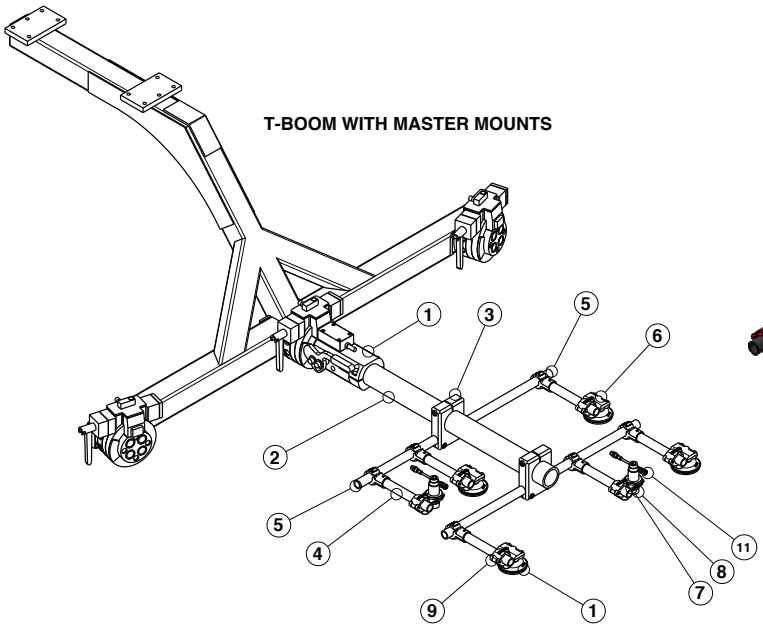

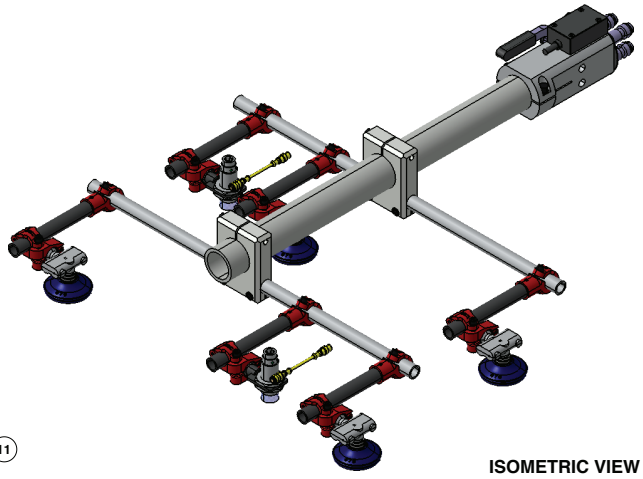

Drawing reference	Quantity	Part number	Description	Page reference
1	1	**Z-TBM-25-A3**	Bayonet mount 2.5" tube	28
2	1	**Z-25-A-800**	Poz-E-Lok 2.5" boom tubing	47
3	2	**ZA-025-010**	Poz-E-Lok clamp 2.5" to 1.0"	70
4	6	**LWBS10E0225**	Featherweight bracket arm, single, M8 bolts	57
5	2	**LWTA10E30**	1.00" Featherweight Aluminum tube	38
6	4	**TPBB-0-1**	Threaded post cup mount, 3/8 NPT	82
7	2	**LAZ1047**	Sensor mount, apple core, 30 mm sensor	
8	2	**BI15-G30-ADZ30X2-B1131**	Barrel sensor 30 mm	
9	6	**LWBC10E25**	Featherweight Clamp, 1" tube to ball	68
10	4	**LTC10-075**	Round Vacuum Cup	90
11	2	**RSRK 301-738/6F**	Electrical cable	
12	1	**PL-215-250-DC**	Electrical box mount (not shown)	
13	1	**A402DSC**	Electrical box (not shown)	
14	1	**Air fittings / Air lines**	Not shown	

Idle Stations

Idle stations are custom engineered solutions for supporting panels in presses. The ergonomic, removable system incorporates the concept of 'poka-yoke' using template location codes to prevent placement mistakes.

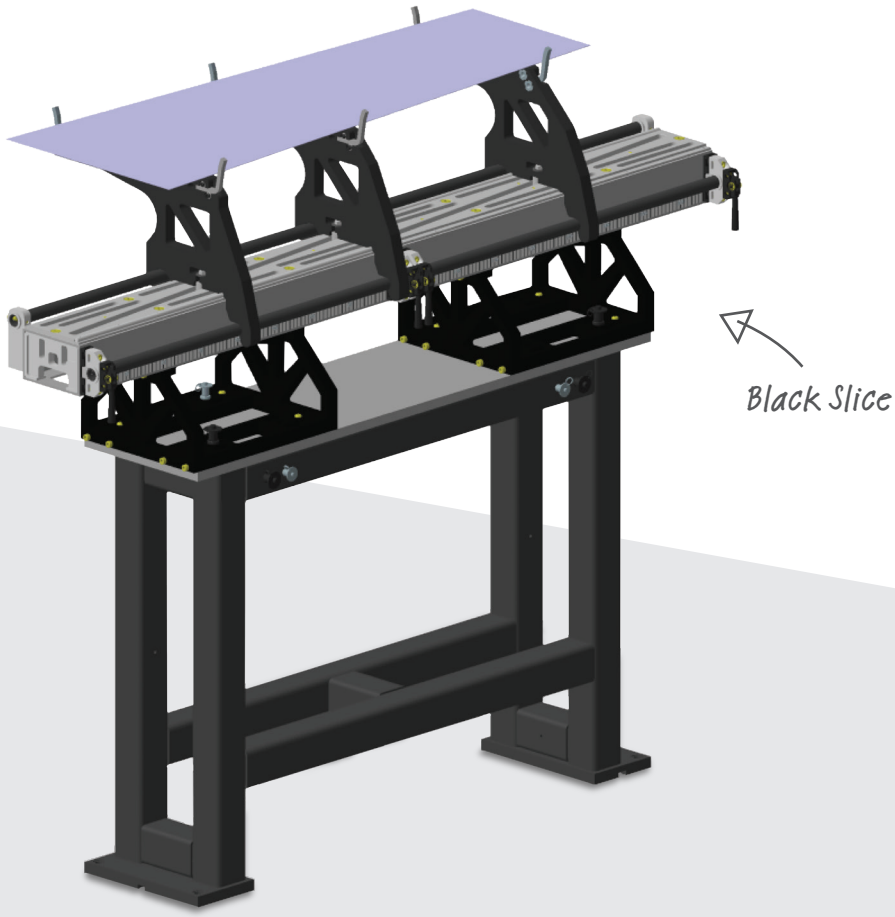

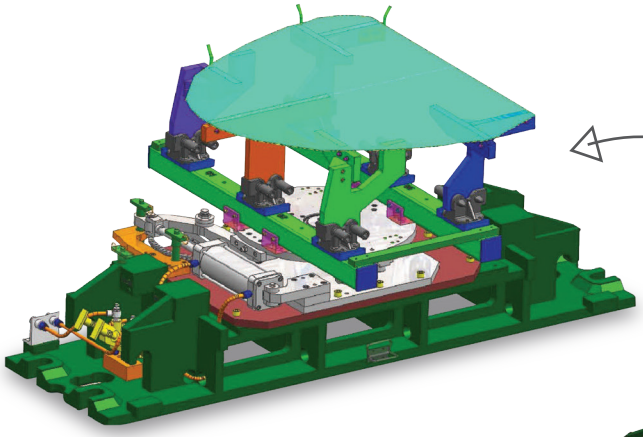

Idle Station
Rotator

Idle Station
Spreader

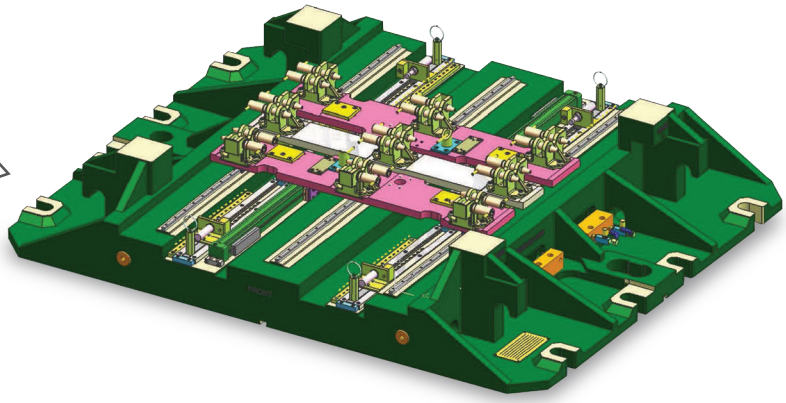

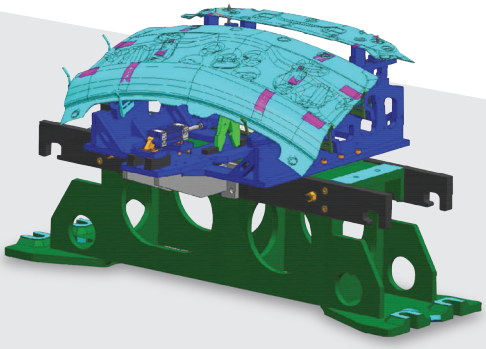

Idle Station
Panel Tipper

Tooling Carts

We offer tooling carts to protect your investment and provide an efficient and space saving solution to your storage needs.

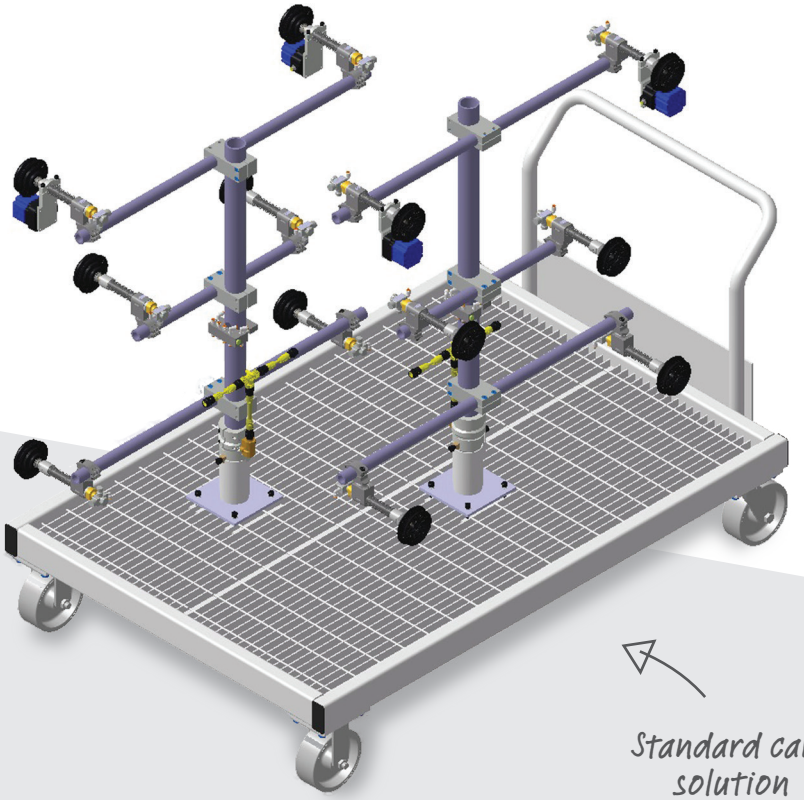

Standard cart solution

IMI Precision Engineering
www.norgren.com/automationsolutions
insidesales@imi-precision.com 1-800-272-4511

Tooling Carts

End of arm tooling carts are designed to store up to 96 fingers to maximize storage capacity within a small footprint. Store your tooling safely and allow quick changeover to reduce downtime!

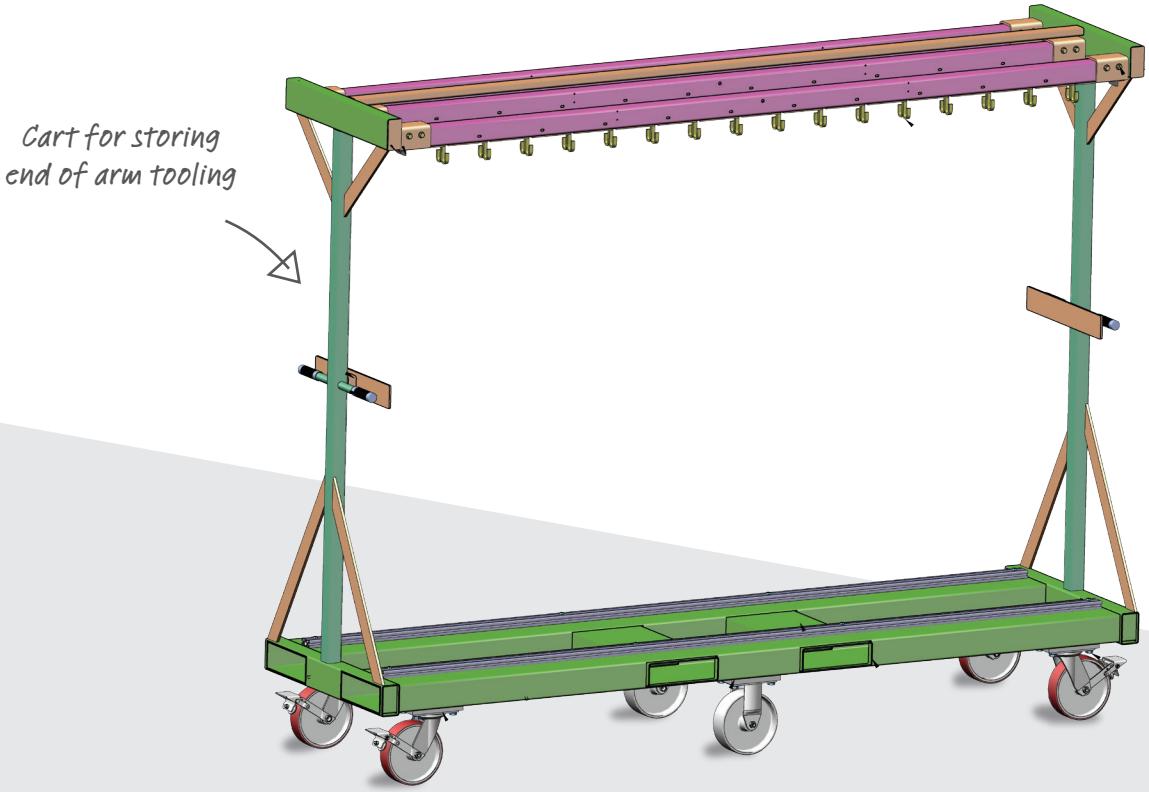

Carbon Fiber Structures

Slow line speeds? Shaking and imprecise part placement are common challenges with steel and aluminum booms, due to their weight and rigidity. And because they cant be repaired, a crash means expensive replacement. Carbon fiber booms, in contrast, offer stability and precision. They are lightweight but high strength so they accommodate higher line speeds, and because they resist shaking, they place parts precisely, every time.

Carbon fiber is also valued in harsh operating environments for temperature stability and chemical resistance. IMI Precision Engineering has advanced carbon fiber technology by developing the capability to mold it into complex shapes, such as T-bars, with a variety of loading characteristics to meet user requirements. They can also repair carbon fiber booms, extending equipment life.

Carbon Fiber Versatile Master Boom

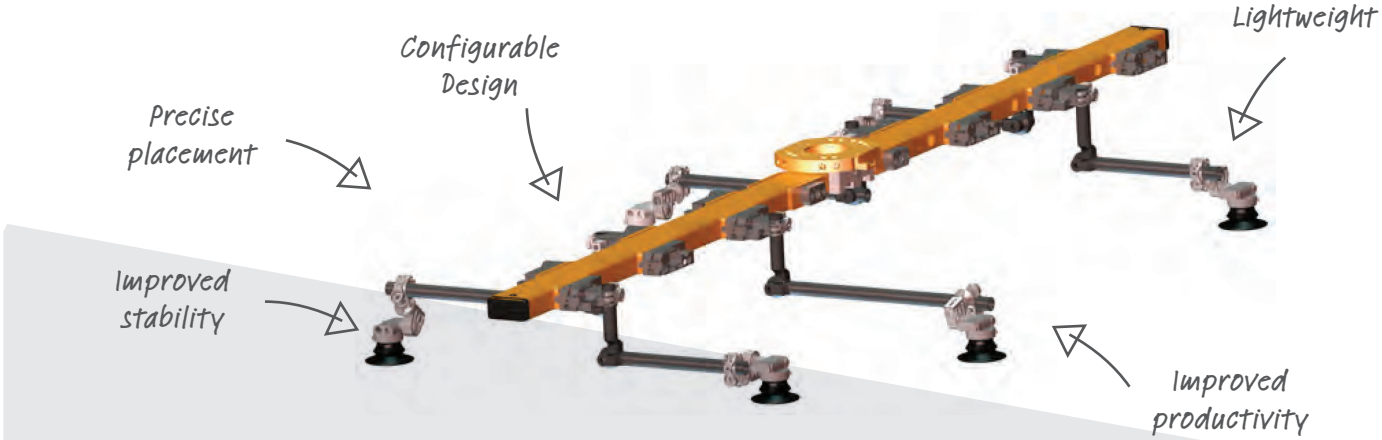

Carbon Fiber Global Boom

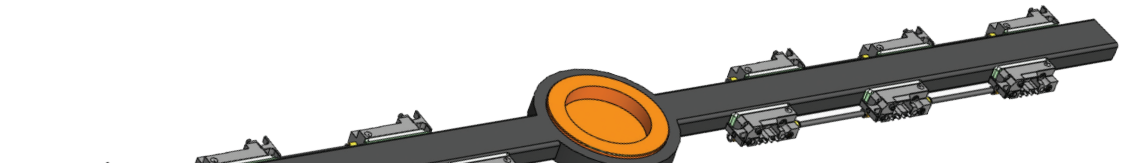

Versatile Master Boom

Global Boom for front of line de-stacking

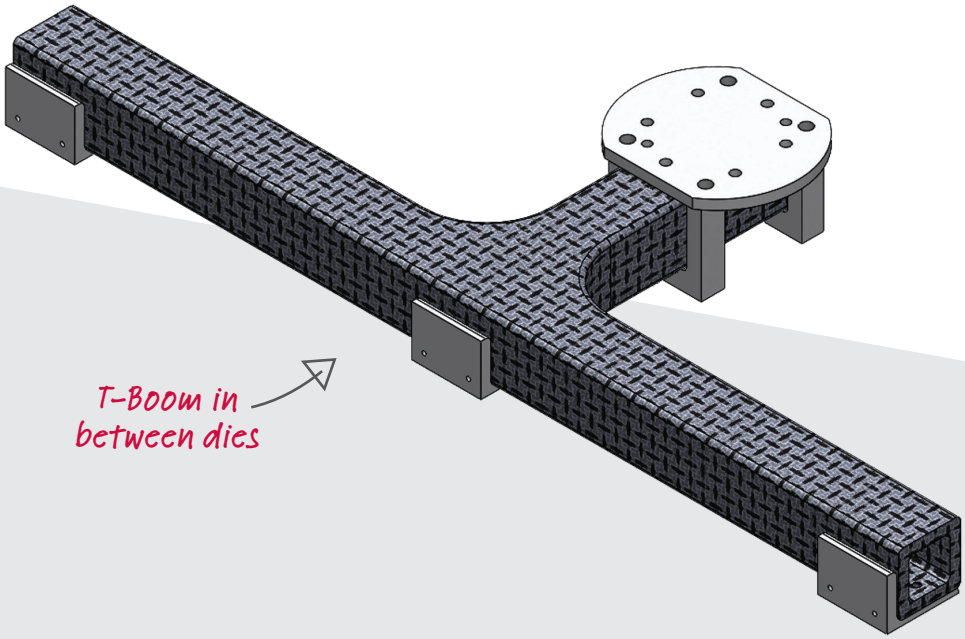

T-Boom in between dies

Receivers and Adapters

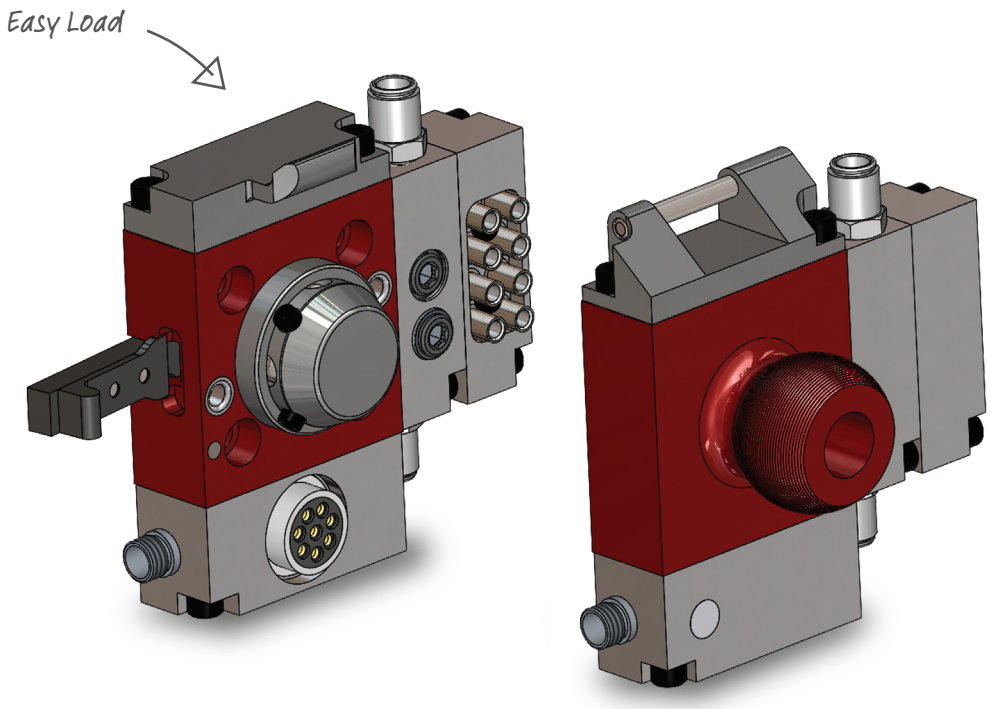

- Quick-change tooling mount/ docking device
- Steel locating pins ensure rotational stability
- Lightweight and compact tool changer
- Ease of use reduces downtime
- Improved ergonomics and safety

Fast Find **Guide**

RRECEIVERS AND ADAPTERS

Easy Load Receiver

16

Easy Load Adapter
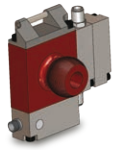
18

LRR Receiver

20

LRA Adapter

24

FIELD ADAPTERS

Bayonet Heavy Duty

26

Bayonet Mount

27

Tooling Flange
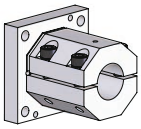
29

Easy Load Receiver

Coming Fall 2017

Easy Load receiver has been engineered with ease of use in mind. It's one-touch loading mechanism makes installation seamless. Optional air, electrics and mechanical coding are available for customization.

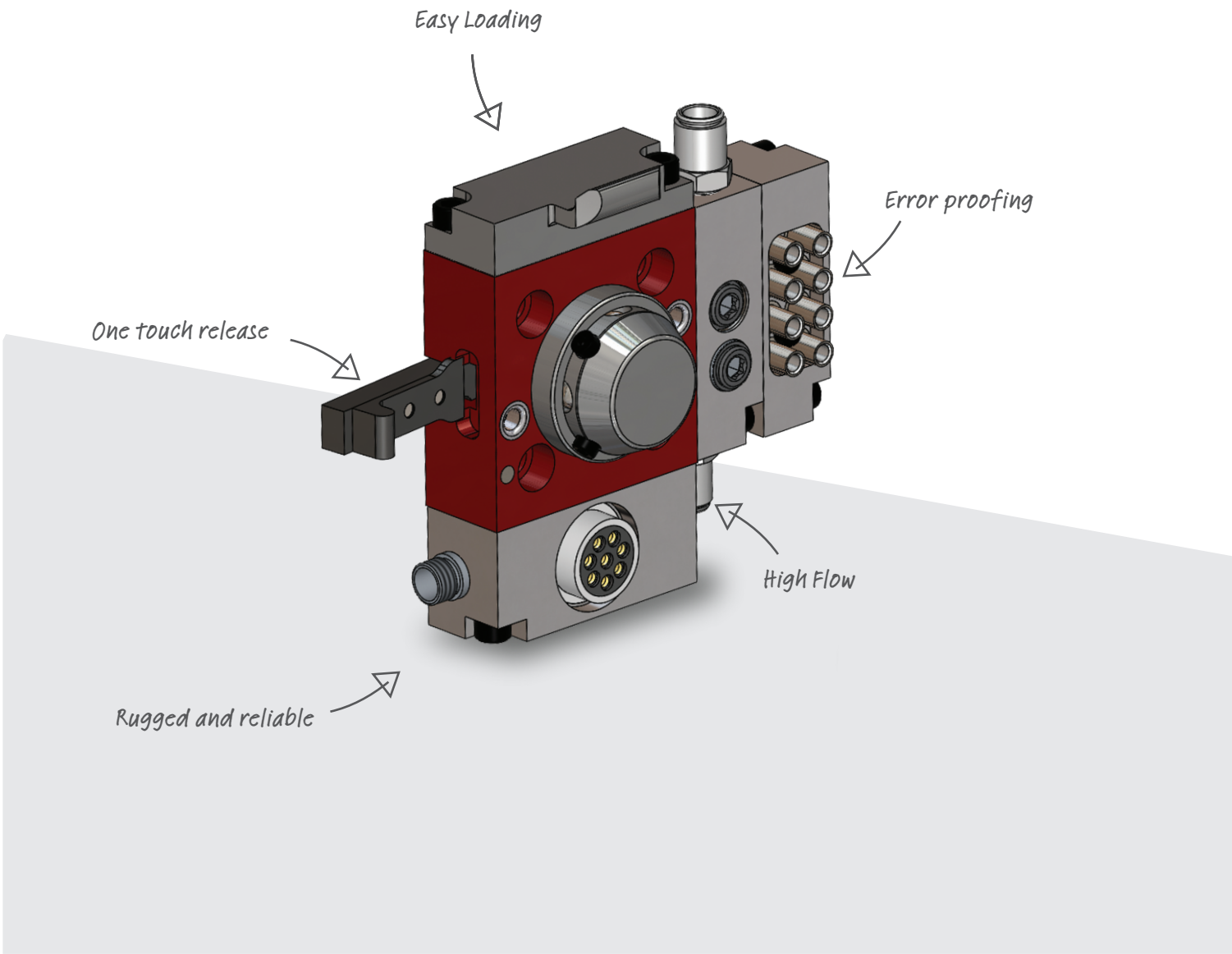

- Rated for 100 ft-lbs dynamic load
- Simple and safe with one-touch loading mechanism
- Uses M8 bolts on industry standard 45 mm pattern
- Optional 8 mm dowels for precise locating
- Staging position allows multiple tools to be carried in at one time
- Safety catch feature to prevent tools from falling
- Optional check valves allow up to 4 high-flow automatic air connections
- Optional electrics allow up to 8-pin automatic electrical connections
- Industry leading heavy duty, 6-point contact gold plated pins and sockets for durability and reliability in even the harshest environments
- Optional 8-pin mechanical code for error-proofing the entire press

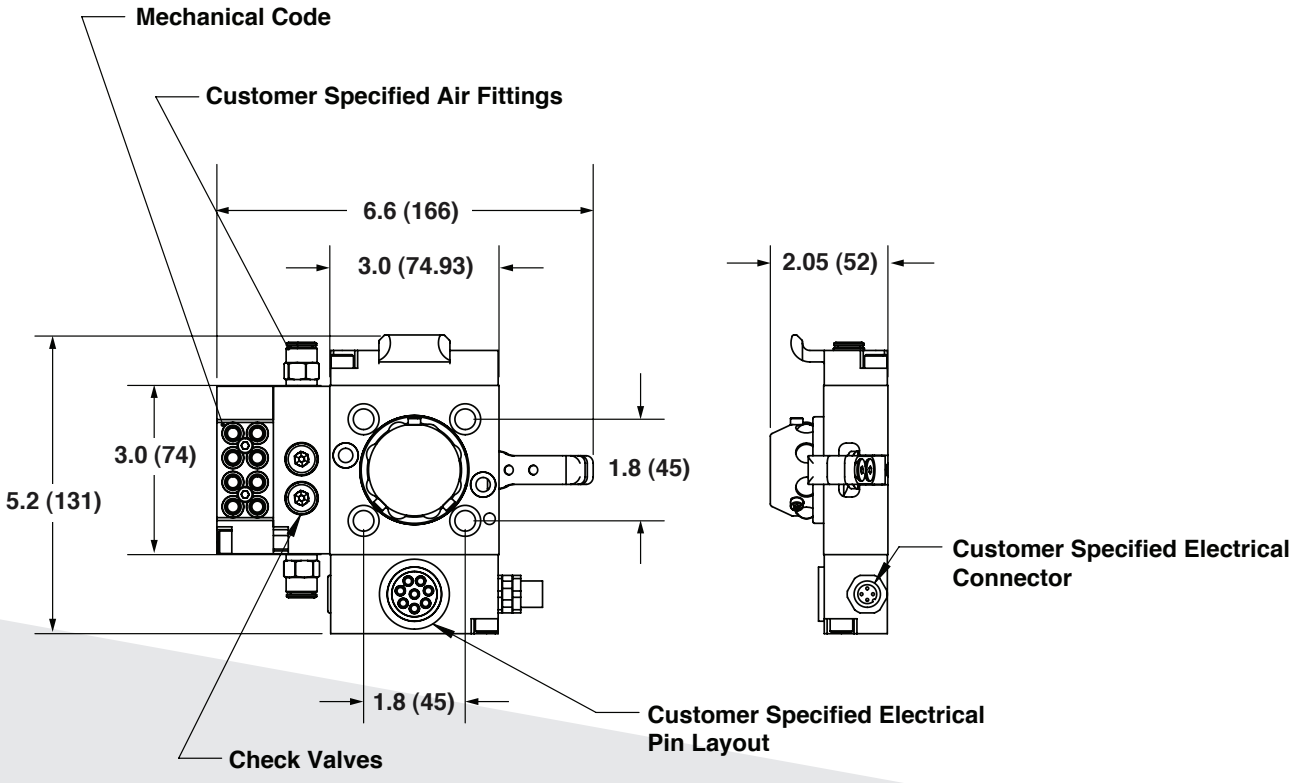

Dimensions in inches (mm) are for reference only

Easy Load Adapter

Coming Fall 2017

Easy Load Adapter is tailored to meet harsh environments. Pick from 13 different tooling options to find what works best in your application. Simply latch the adapter to the receiver and you are ready to go.

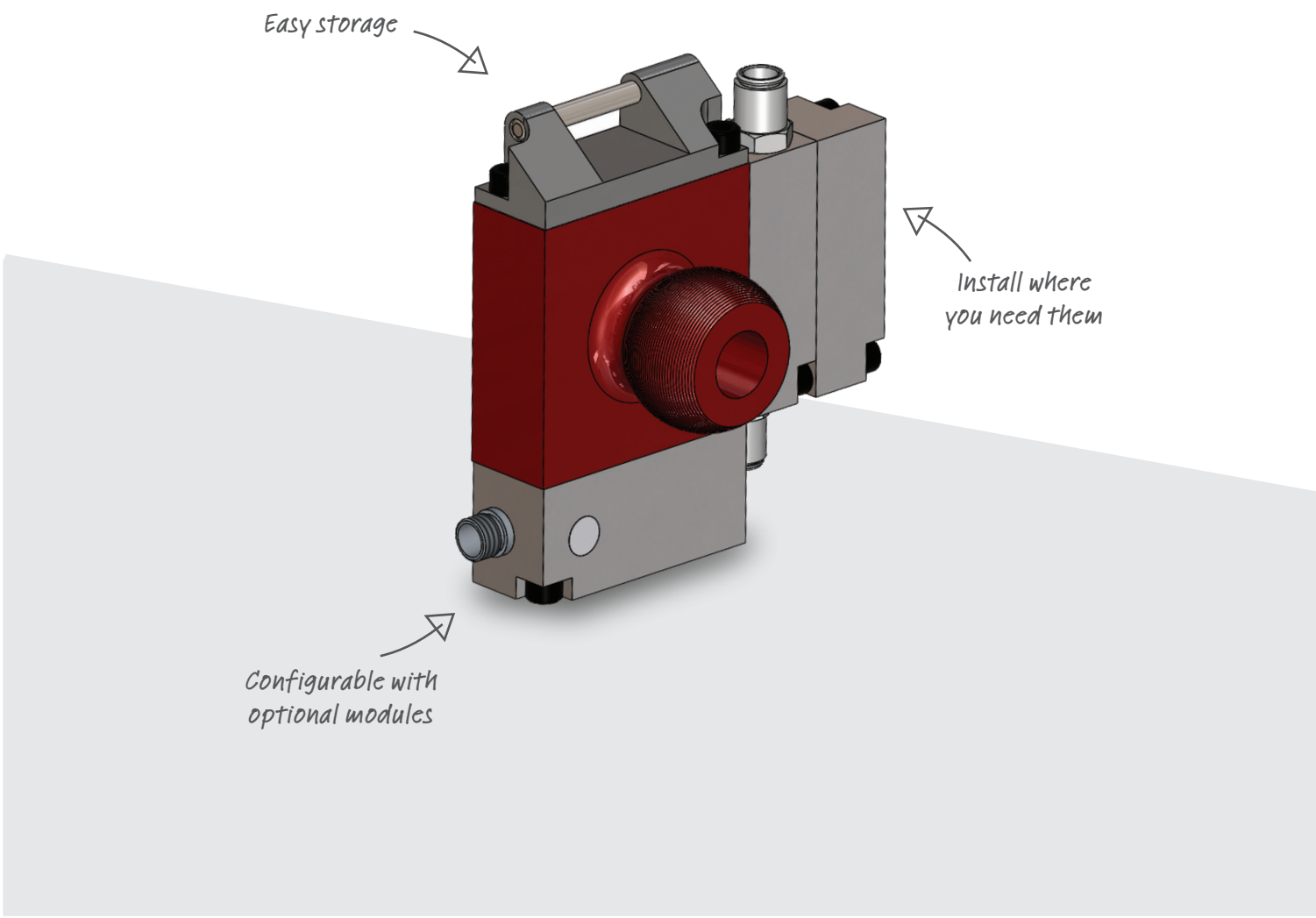

- Compatible with Easy load receiver
- Rated for 100 ft-lbs dynamic load
- Simple and safe with one-touch loading mechanism
- Optional tooling mounts include: 1.0", 1.25" and 25 mm, Versa knuckle, 1.5" and 40 mm, either in straight (shown) or 90º connection
- Easy Swing-in tooling design for fast, easy loading
- Staging position allows multiple tools to be carried in at one time
- Safety catch feature to prevent the tool from falling
- Optional air ports allow up to 4 high-flow automatic air connections
- Optional electrics allow up to 8-pin automatic electrical connections
- Industry leading heavy duty, 6-point contact gold plated pins and sockets for durability and reliability in even the harshest environment
- Optional 8-pin mechanical code for error-proofing an entire press

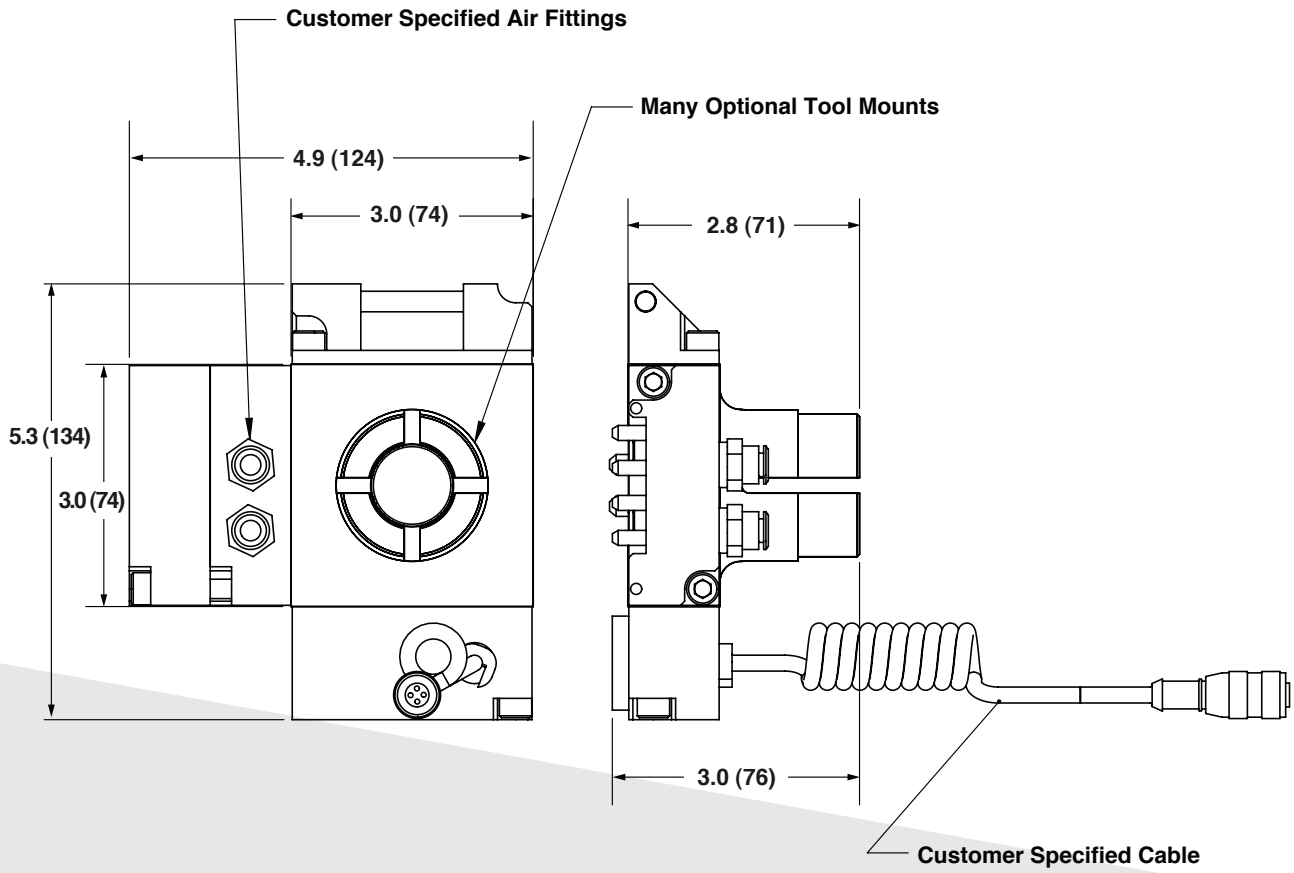

Dimensions in inches (mm) are for reference only

Rail Receiver with rear exit air and/ or electric LRR2XXXXXXXX

- Receiver bolts to transfer feedbar
- Acts as a docking device for quick changeover of transfer fingers
- Steel locating pins of receiver adapter slide into sleeved holes of receiver face for maximum rotational stability
- Finger held in receiver by simple one touch spring loaded latch – no locking handle required

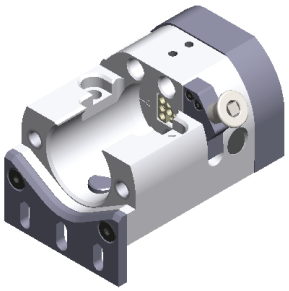

Order information

LRR2XXXXXXXX

Finger Release Handle Type	Code
Mushroom Type	0
"T" Type	5

Mount Type	Code
Long Keyplate	A
Mount Plate Short	B
Mounting Plate	E
Short Keyplate	K
No Keyplate	N

Electric Connector Type and Location	Code
No Connector	NN
3-Pin Backplate Mount	3B
4-Pin Backplate Mount	4B
5-Pin Backplate Mount	5B

Pneumatic Ports and Location - Note 1	Code
No Pneumatic Ports	NN
Rear Exit Pneumatic 2 Ports (1/4-18)	RY
Side Exit Pneumatic 2 Ports (1/4-18)	SY
Rear Exit Pneumatic 2 Port (1/4-19)	BY
Rear Exit Pneumatic 4 Port (1/4-18)	C4
Under Exit Pneumatic 2 Ports (1/4-18)	UY

Electric Connector Exit Orientation - Note 1	Code
No Connector	N
Rear Exit Connector	R
RH Side Exit Connector	S
LH Side Exit Connector	L
Under Exit Connector	U

Tooling Coding	Code
No coding	N
Clear Mechanical Coding - Note 2	M
Red Mechanical Coding - Note 2	R
Mechanical Coding - Note 2	C

Note 1: The exit location of the electrical connector and pneumatic ports must be the same. They must both exit the rear, the side or the bottom.
Note 2: Mechanical Coding block is installed. The actual code is not configured at the factory.

Technical data

Weight:
1.64 lbs. (744 g)

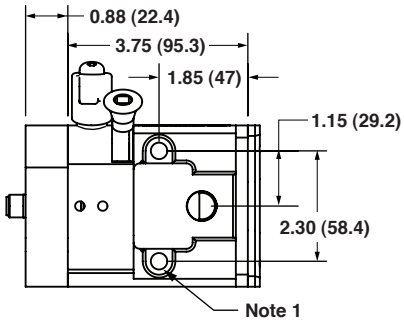

General Table
Note 1: For 2X 8 mm SHCS
Note 2: For 2X 6 mm SHCS
Note 3: Optional locking handle shipped loose for field installation if required
Note 4: For 8 mm locating pin

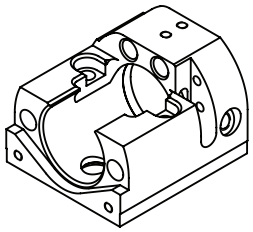

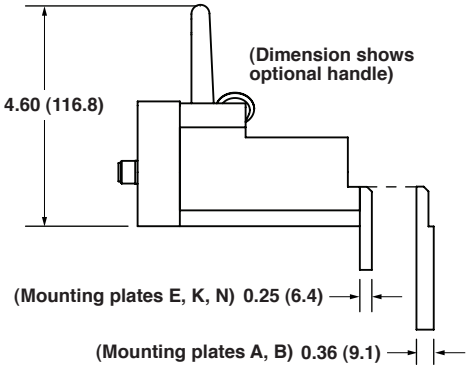

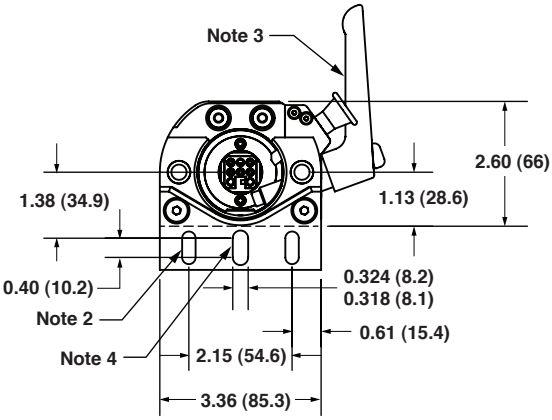

Short Mounting Plate (K)

(See next page for additonal mounting plate options)

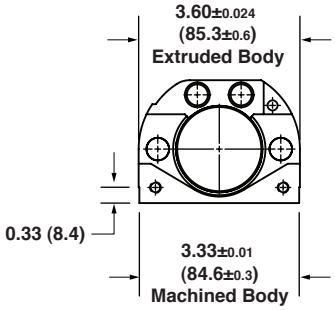

Extruded Body Shown

Dimensions in inches (mm) are for reference only

Additional Mounting Plates

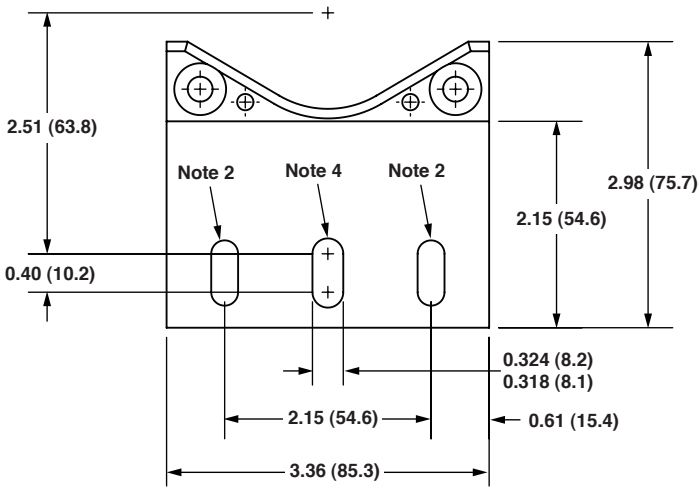

Long Mounting Plate (A)

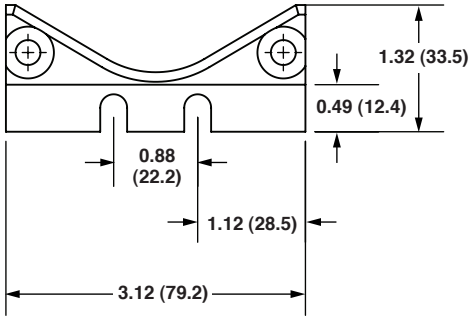

Mounting Plate (B)

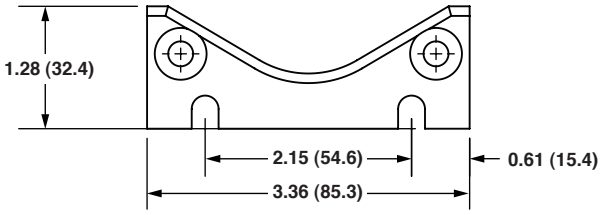

Mounting Plate (E)

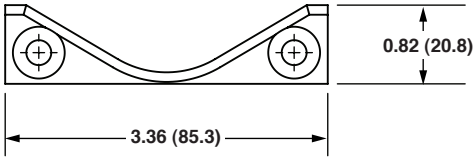

No KeyPlate (N)

Dimensions in inches (mm) are for reference only

Air/ Electric Connector Overview

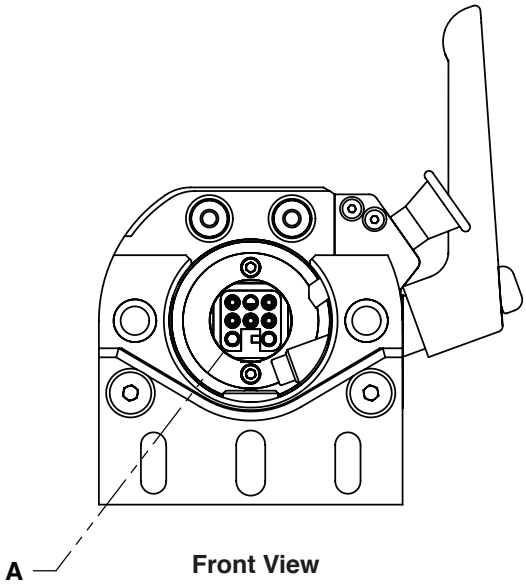

Front View

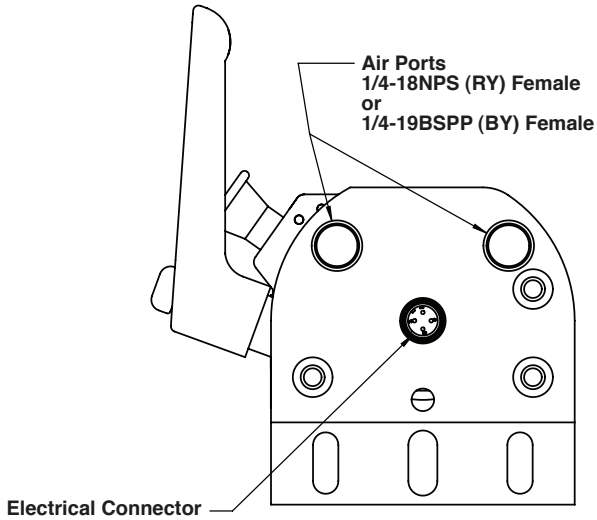

Back View

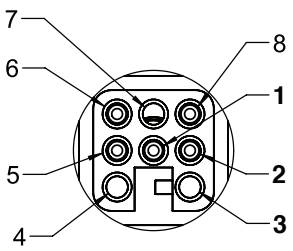

Detail A

Front View
Female Connector

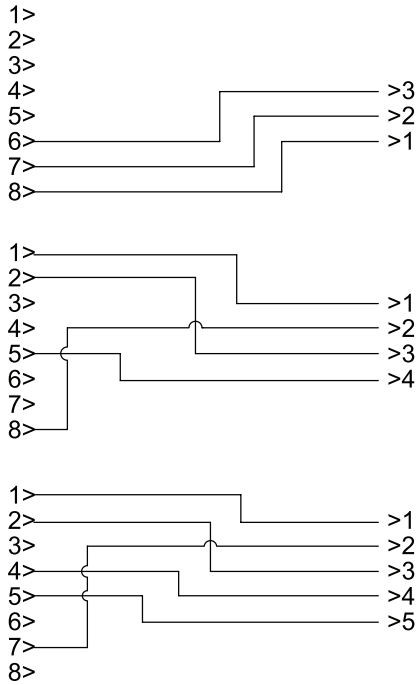

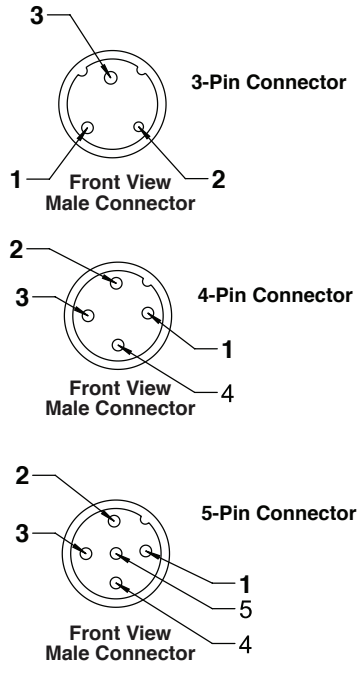

LRA20 Receiver Adapter universal style
LRA20UNXXXXX

- Compatible with series LRR20 or LRR25 Rail Receiver for quick change of transfer finger
- Steel locating pins of receiver adapter slide into sleeved holes of receiver face for superior rotational stability
- Versa-Link tubes or branches with 1.25" outer diameter (O.D.) slide inside and are clamped in place with LCH1175 collar clamp
- 1.75" inner diameter (I.D.) branch clamps with stud can clamp on O.D. for immediate 90º offset

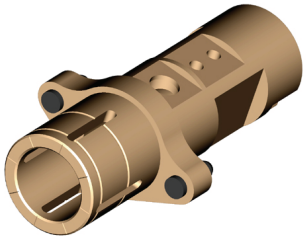

Order information

LRA20UNXXXXX

Pneumatic Ports	Code
No Ports	N
2 Ports - 1/4" tubing	A
2 Ports - 8 mm tubing (similar to 3/8" tubing)	B
2 Ports - 6 mm tubing	C

Electrical Connections	Code
No Electrical Connection	NNN
3-Pin Electrical Connection	3EN
4-Pin Electrical Connection	4EN

Tool Coding	Code
No Coding	N
Device Net Coding	D
Mechanical Coding	M

Technical data

Weight:
394 g
Pneumatic ports - add 66 g
Electrical connector - add 45 g

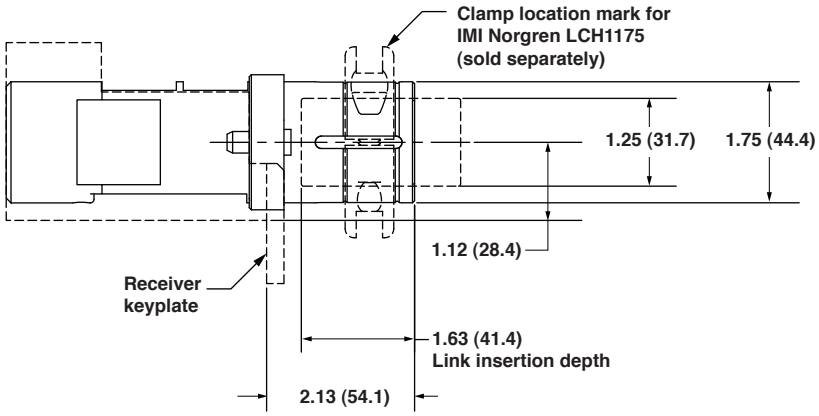

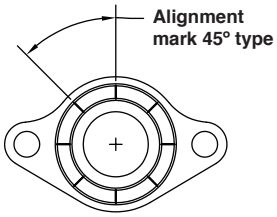

Application

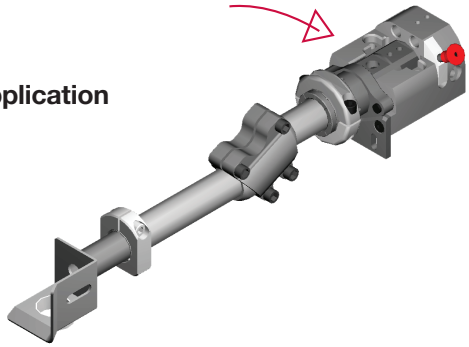

Dimensions in inches (mm) are for reference only

Optional pneumatic ports and electrical connections

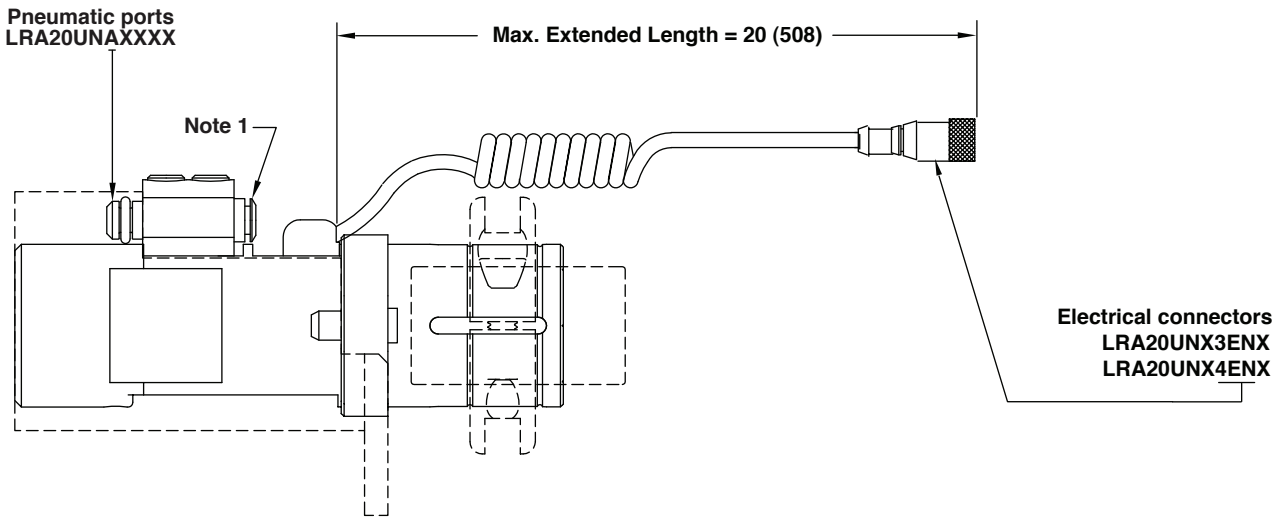

Note 1: Push-in fitting for corresponding plastic tubing utilized.

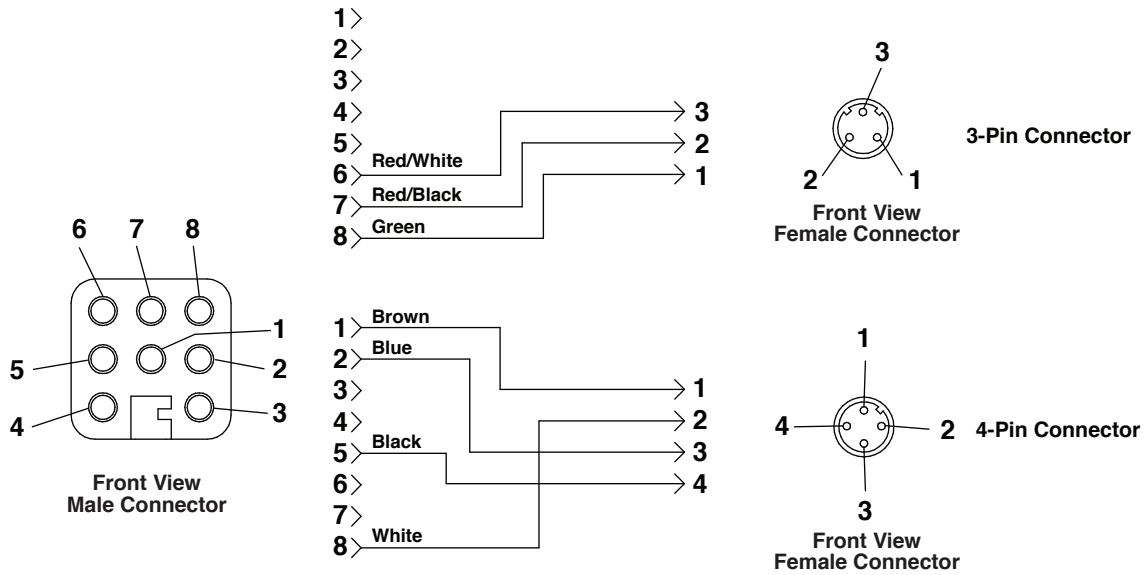

Dimensions in inches (mm) are for reference only

Heavy Duty Bayonet, 15 Series
LAA4009XXXXX

> Adapter is used with alternative (non-IMI Norgren) quick connect housing

Order information

LAA4009XXXXX

Code Position	Code
Top left	1
Bottom left	2
Bottom right	3
Top right	4
None	N

Air Ports	Code
1/8 NPT	A
1/4 NPT	B
1/8 NPT 6 Port	C
1/4 NPT 3 Port	D
1/4 NPT and 3/8 NPT 6 Port	E
None	N

Electric Connections	Code
3 Pin mini	3
5 Pin micro	5
None	N

Tube Size	Code
1.50"	Blank
40 mm	40
1.50" with locking ring	18

Technical data

Weight:
1.3 lbs / 583 g

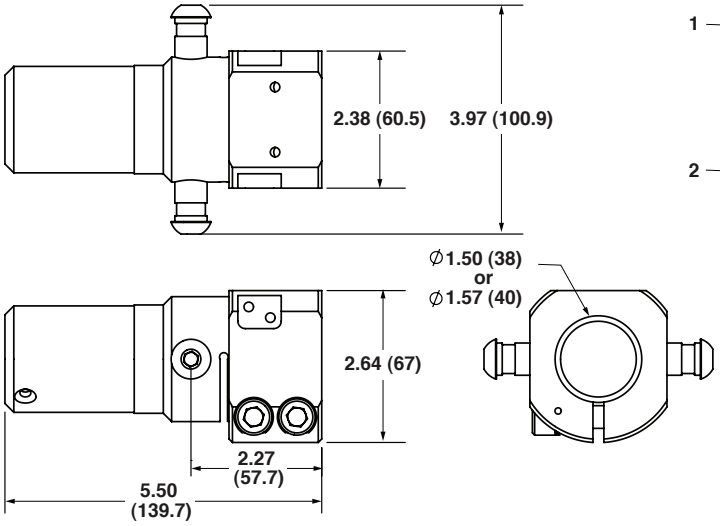

Coding positions

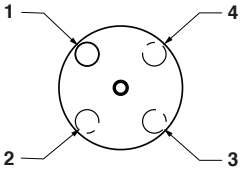

Dimensions in inches (mm) are for reference only

Bayonet Mount
Z-TBM-15-XX-XX

> Works with alternative (non-IMI Norgren) housing

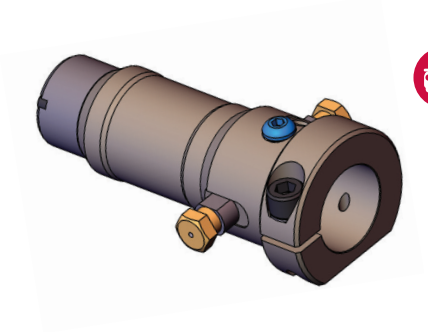

Order information

Z-TBM-15-XX-XX

Air Port	Code
None	A0
3 Internal Air Ports	A3

Key Location	Code
Position 1	K1
Position 2	K2

Technical data

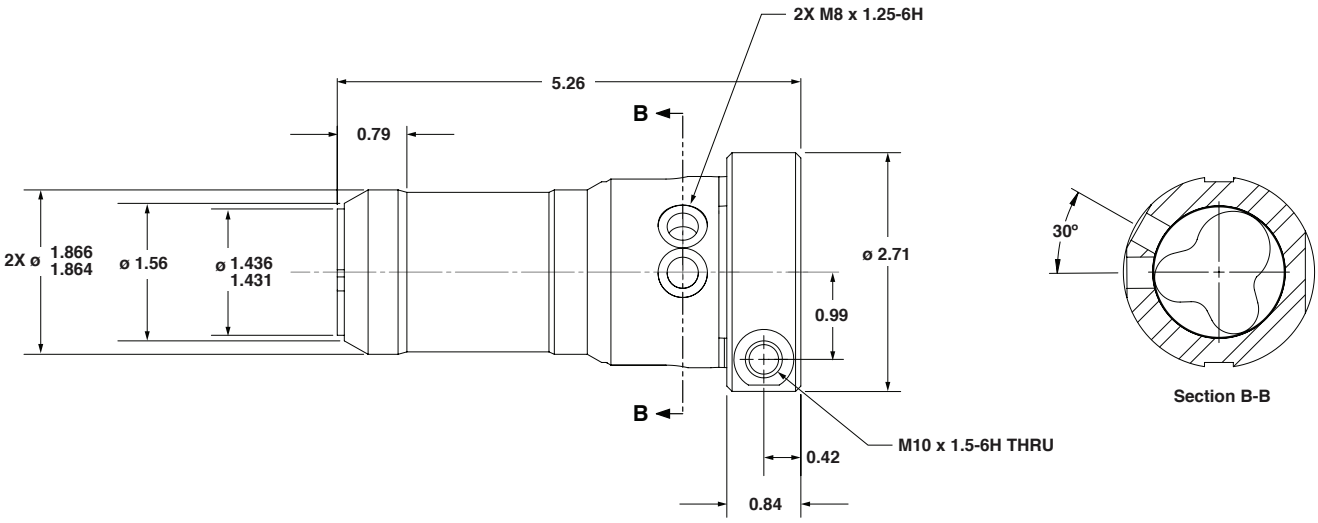

Dimensions in inches (mm) are for reference only

Bayonet Mount
Z-TBM-XX-XX-XX-XX

> Adapter is used with alternative (non-IMI Norgren) quick connect housing

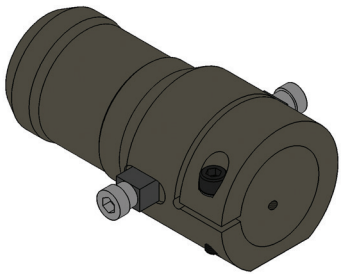

Order information

Z-TBM-XX-XX-XX-XX

Boom Diameter	Code
2.5 in	25
60 mm	60

Air Port	Code
None	A0
3 Port	A3
6 Port	A6

Electrical Options	Code
No Electric Plug	E0

Port Option	Code
MT	Metric
ST	Standard

Technical data

Weight:
A0 Option: 3.75 lbs (1.7 kg)
A6 Option: 4.00 lbs (1.8 kg)

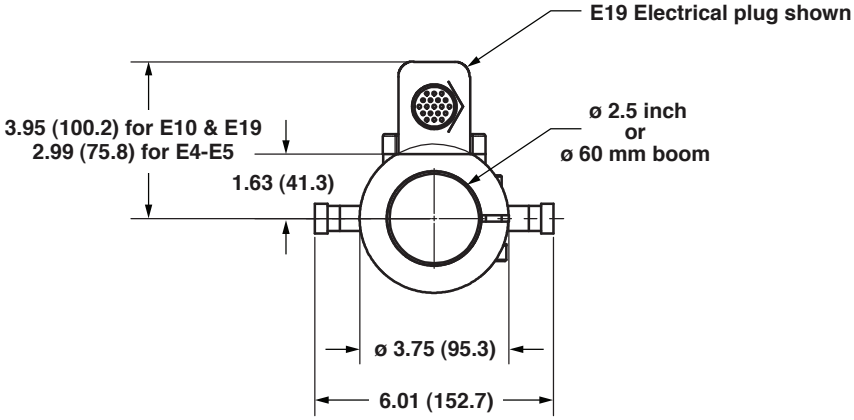

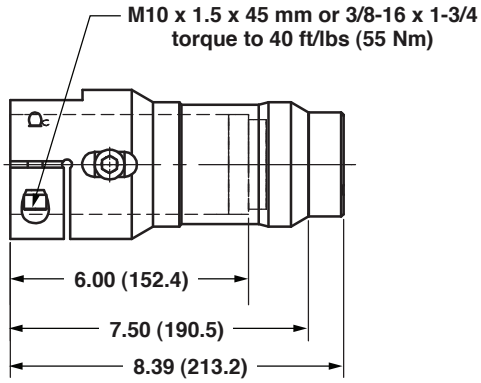

Dimensions in inches (mm) are for reference only

Tooling Flange End Mount
TFXE-NP

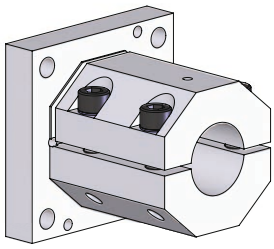

Order information

TFXE-NP

Diameter	Code
1.50"	1
40 mm	4

Mount	Code
End Mount	E

Pilot	Code
Omit Pilot on Mounting Surface	NP

Technical data

Weight:
2.97 lbs. (1.35 kg)
Material:
Aluminum

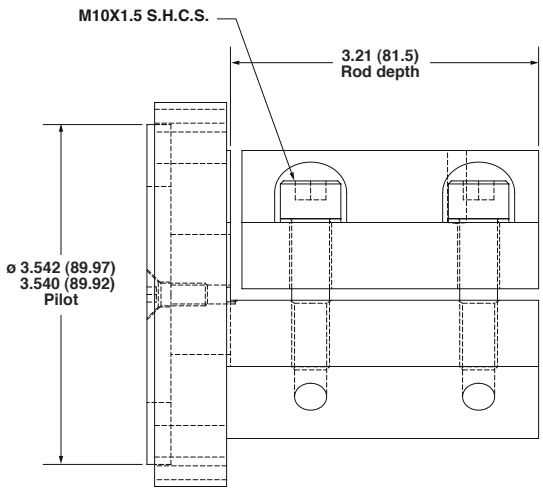

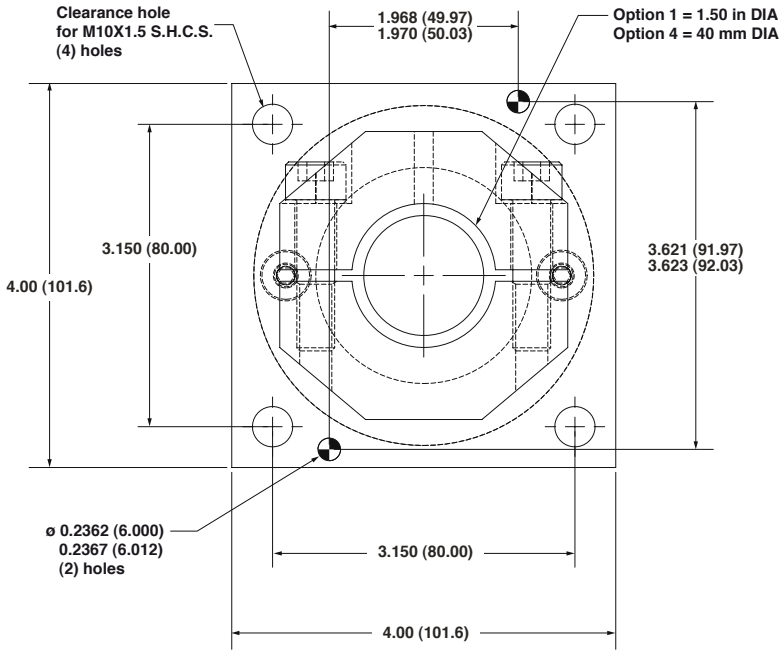

Dimensions in inches (mm) are for reference only

Tooling Flange Saddle Mount
TFXS-NP

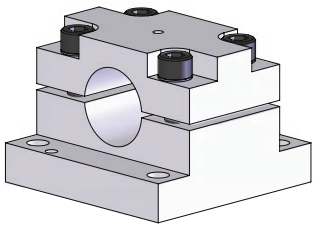

Order information

TFXS-NP

Diameter	Code
1.50"	1
40 mm	4

Mount	Code
Saddle Mount	S

Pilot	Code
Omit Pilot on Mounting Surface	NP

Technical data

Weight:
2.80 lbs. (1.27 kg)
Material:
Aluminum

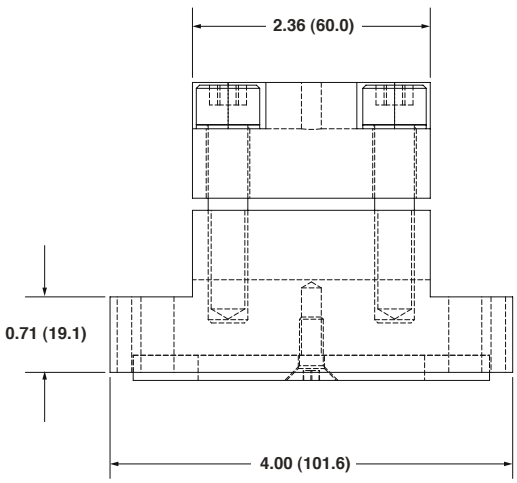

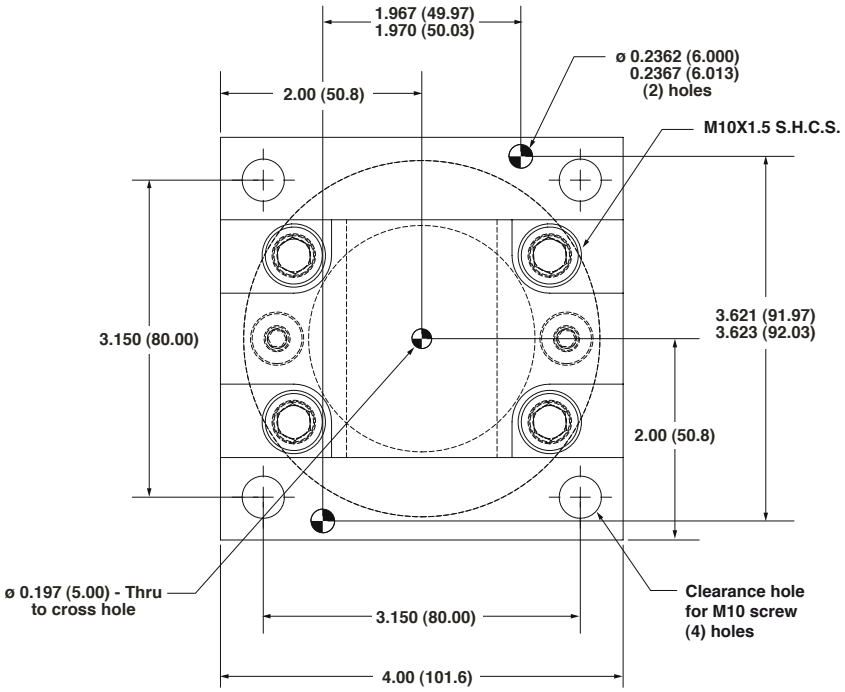

Dimensions in inches (mm) are for reference only

Round Tooling

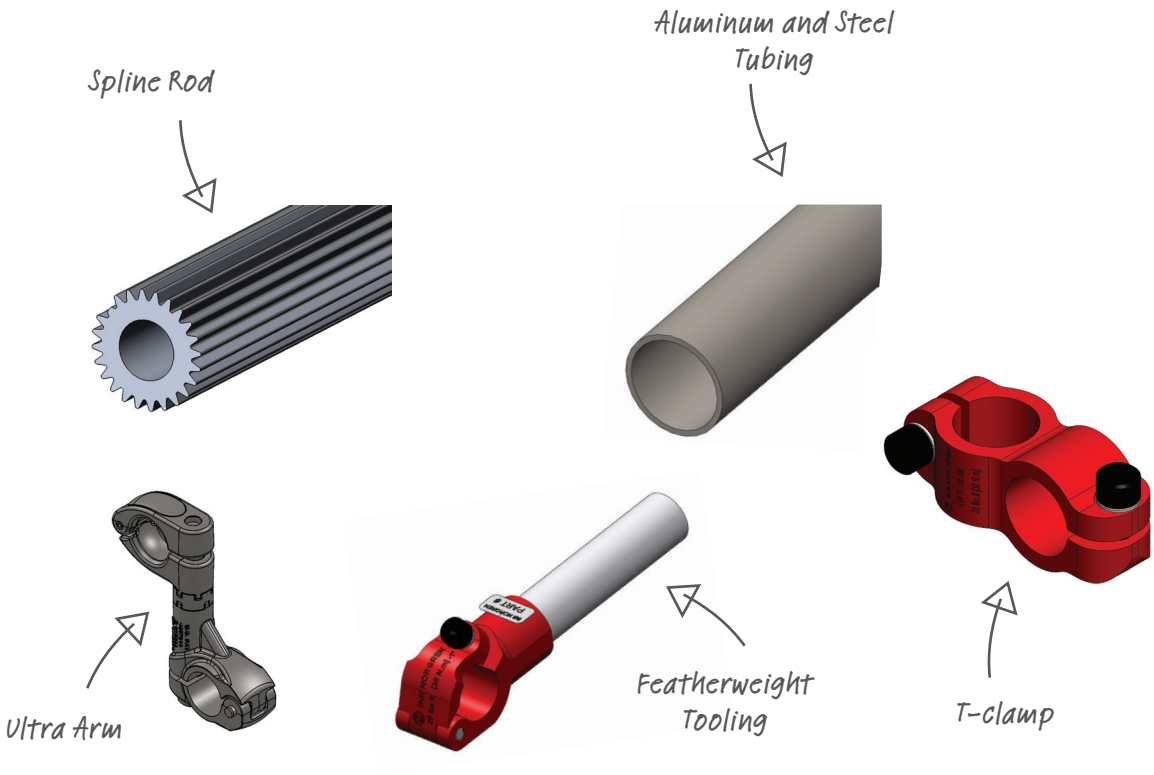

- Spline Rods
- Aluminum, steel and Featherweight Tubing
- Clamps
- Ultra Arms
- Bracket Arm

Fast Find **Guide**

SPLINE RODS

Spline Rods
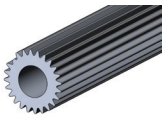
34

TUBING

Featherweight Tooling Tubing

38

Aluminum and Steel Tubing

41

BRACKET ARM

Featherweight Bracket Arm

57

EA Bracket Arm
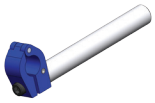
61

ULTRA ARM

Ultra Mount Bracket Metrc

63

HD Ultra Arm Clamp Bracket
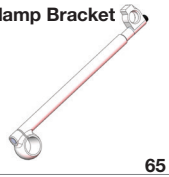
65

Fast Find **Guide**

TELESCOPING ULTRA ARM

IOT Telescoping Ultra Arm

67

CLAMPS

Featherweight Ball Clamp

68

Featherweight Tooling T-clamps
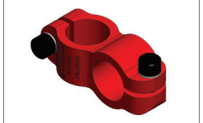
69

Poz-E-Lok Clamp
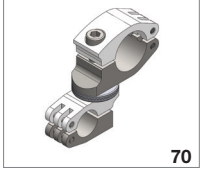
70

Receiver Mounts
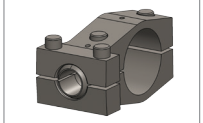
71

Spline Rod
TRS25-XXX

> 25 mm spline rod

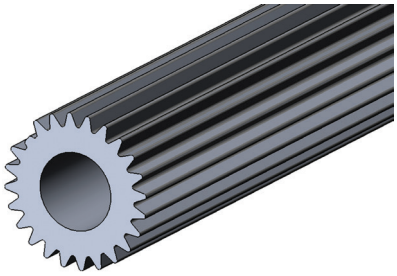

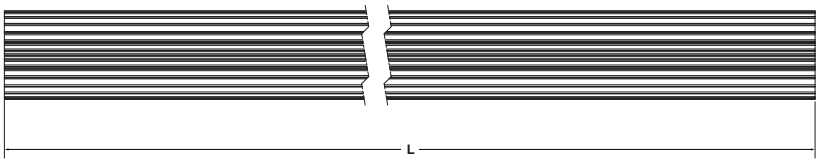

Order information

TRS25-XXX

Length, mm	Code
300	**300**
XXX	**XXX**
900	**900**

*Lengths available: 300 mm to 900 mm, in 100 mm increments

Technical data

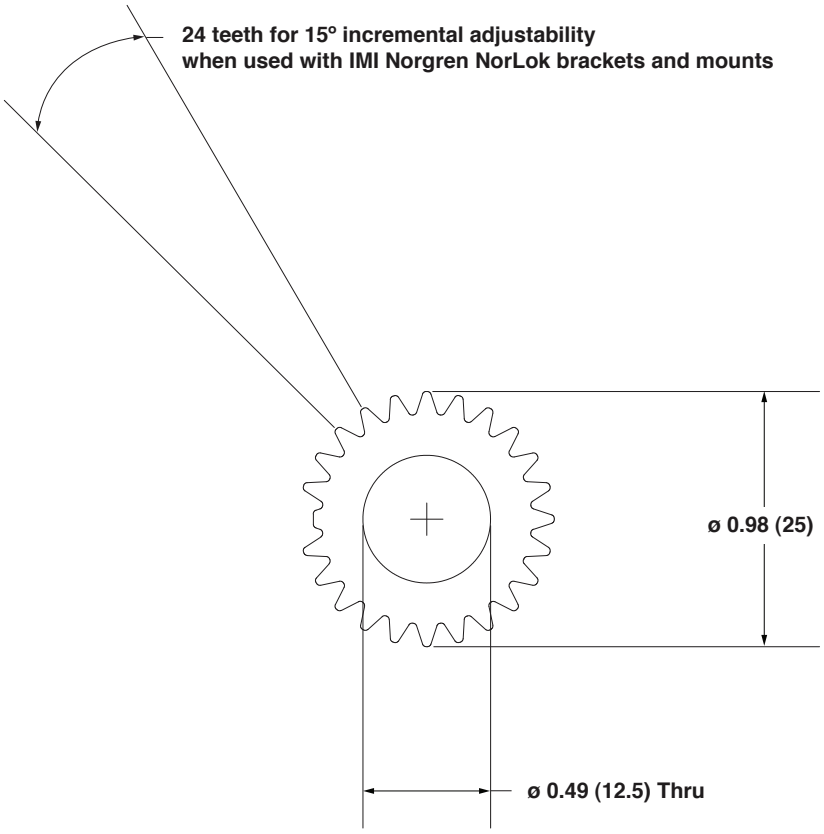

Dimensions in inches (mm) are for reference only

Spline Rod
TRS25-XXX

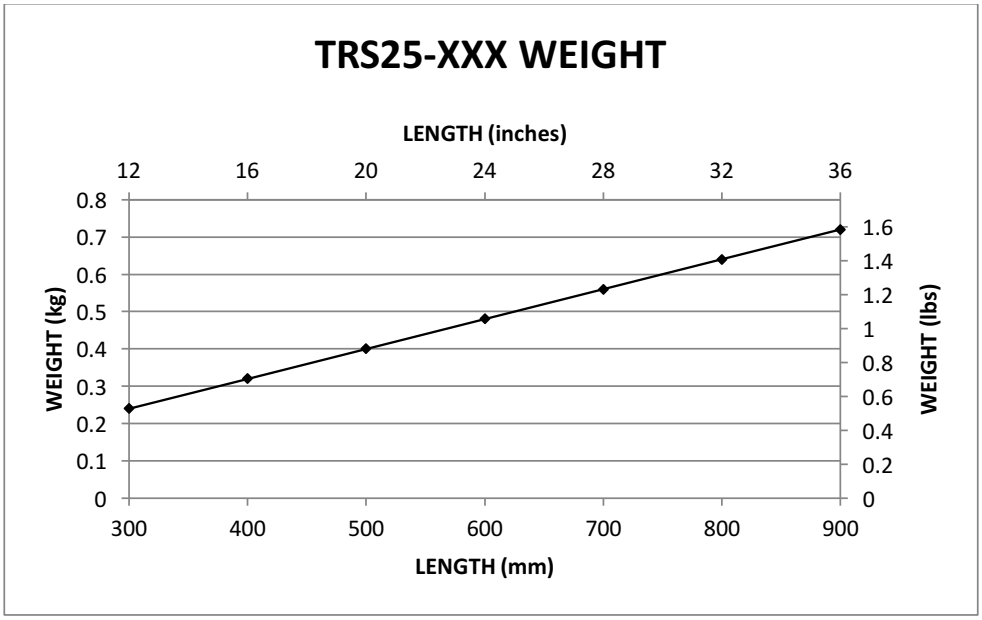

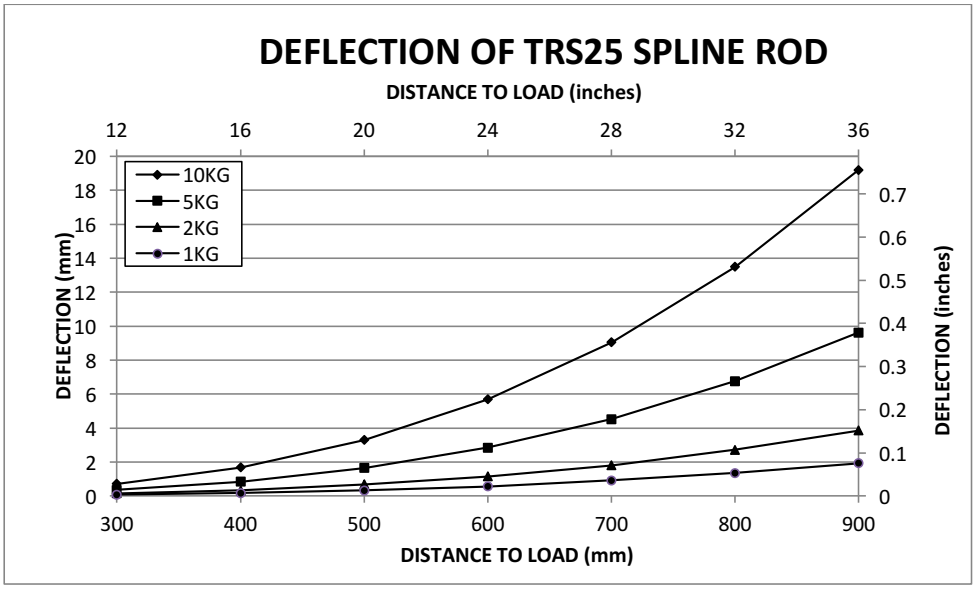

Material: Aluminum

Dimensions in inches (mm) are for reference only

Spline Rod
TRS40-XXX

> 40 mm spline rod

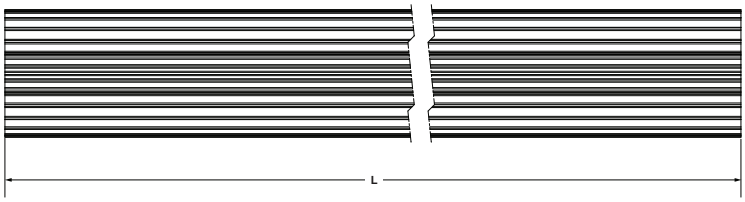

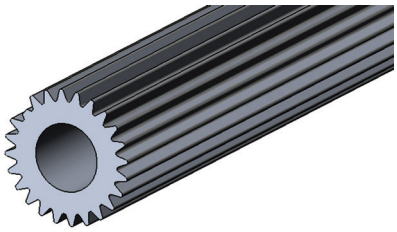

Order information

TRS40-XXX

Length, mm	Code
300	**300**
XXX	**XXX**
1500	**1500**

*Lengths available: 300mm to 1500 mm, in 100 mm increments

Technical data

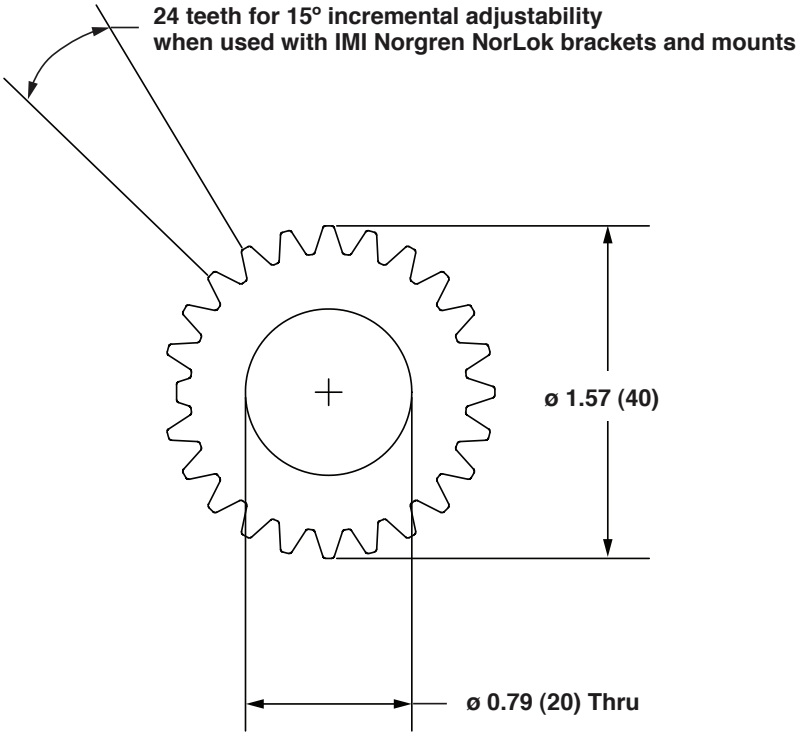

Dimensions in inches (mm) are for reference only

Spline Rod
TRS40-XXX

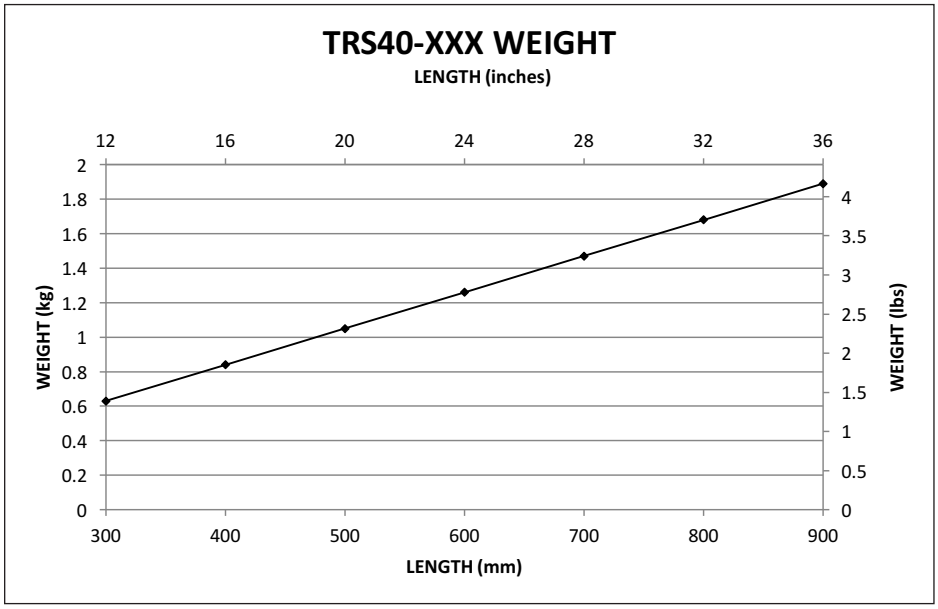

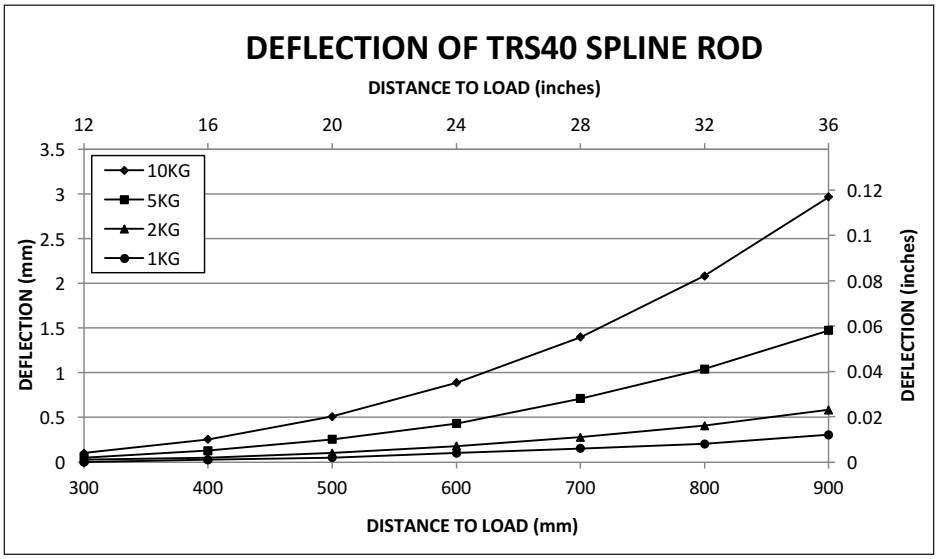

Material: Aluminum

Dimensions in inches (mm) are for reference only

Featherweight Tooling Tubing
LWTA10EXXXX

> 1.00" diameter aluminum tubing

Order information:

LWTA10EXXXX

Length*	Code
100	**0100**
XXXX	**XXXX**
3650	**3650**

*Lengths available: 100 mm to 3650 mm in 25 mm increments

Application notes

Tubes weight 0.03 lbs/in (589 g/m)

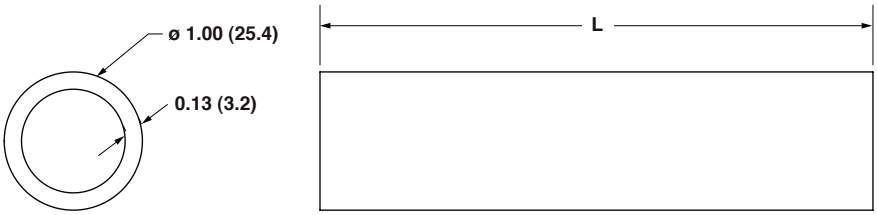

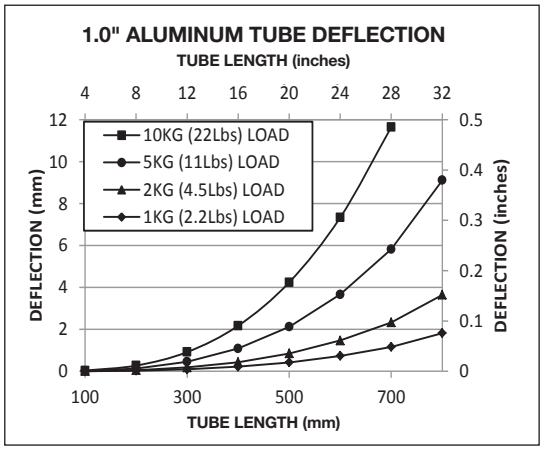

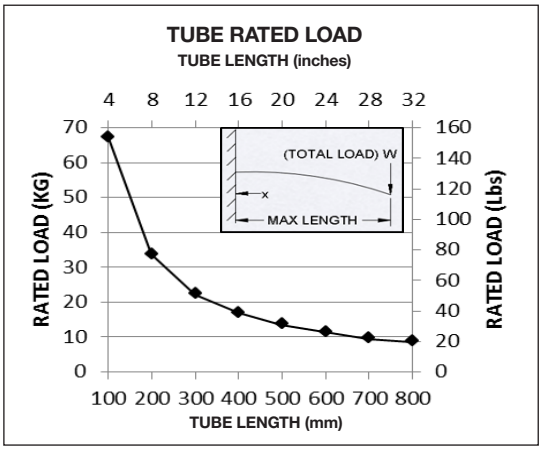

Dimensions in inches (mm) are for reference only

Featherweight Tooling Tubing
LWTA15EXXXX

> 1.50" diameter aluminum tubing

Order information:

LWTA15EXXXX

Length*	Code
100	**0100**
XXXX	**XXXX**
3650	**3650**

*Lengths available: 100 mm to 3650 mm in 25 mm increments

Application notes

Tubes weight 0.05 lbs/in (928 g/m)

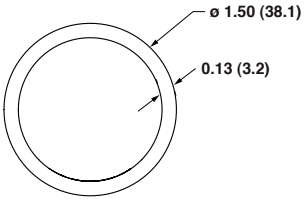

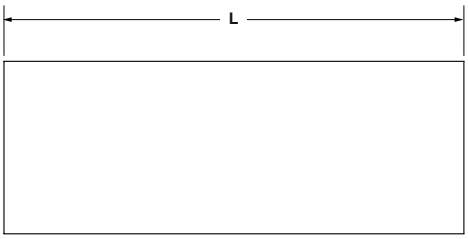

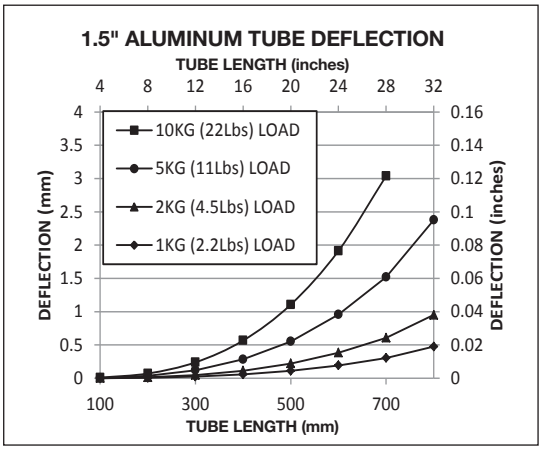

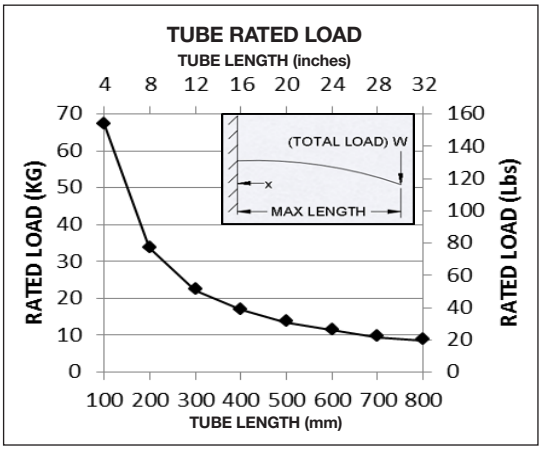

Dimensions in inches (mm) are for reference only

Featherweight Tooling Tubing
LWTS10EXXXX

> 1.00" diameter steel tubing

Order information:

LWTS10EXXXX

Length*	Code
100	**0100**
XXXX	**XXXX**
3650	**3650**

*Lengths available: 100 mm to 3650 mm in 25 mm increments

Application notes

Tubes weight 0.09 lbs/in (1607 g/m)

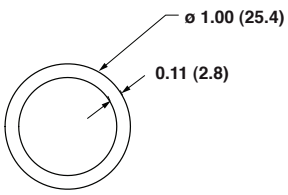

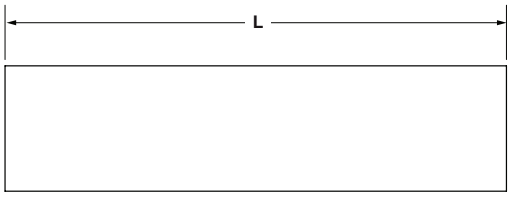

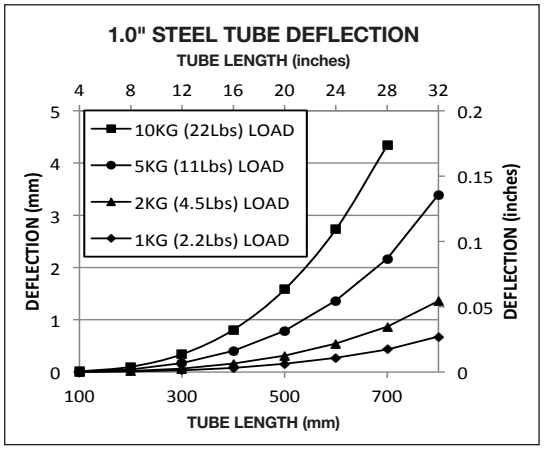

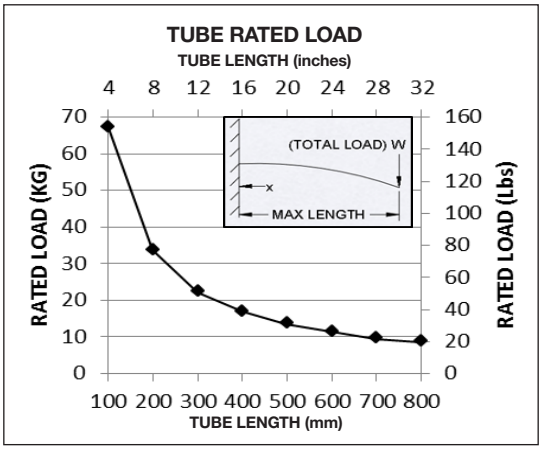

Dimensions in inches (mm) are for reference only

Aluminum and Steel Tubing
Z-10-X-XXXX

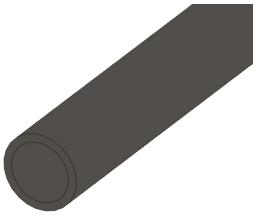

Order information

Z-10-X-XXXX

Diameter	Code
1.00" Boom Rod Tubing	**10**

Material	Code
Steel	**S**
Aluminum	**A**

Length, mm	Code
75	**75**
XXXX	**XXXX**
900	**900**

*Lengths available: 75 mm to 900 mm, in 25 mm increments

Technical data

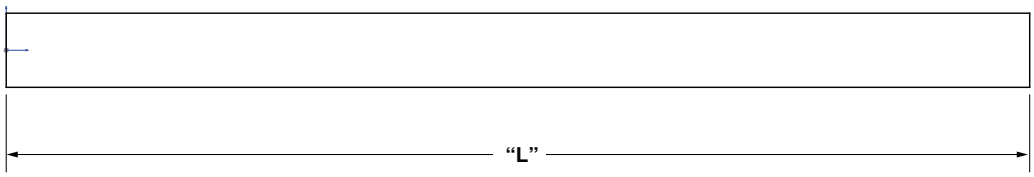

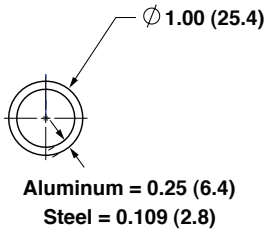

Dimensions in inches (mm) are for reference only

Aluminum and Steel Tubing
Z-10-X-XXXX

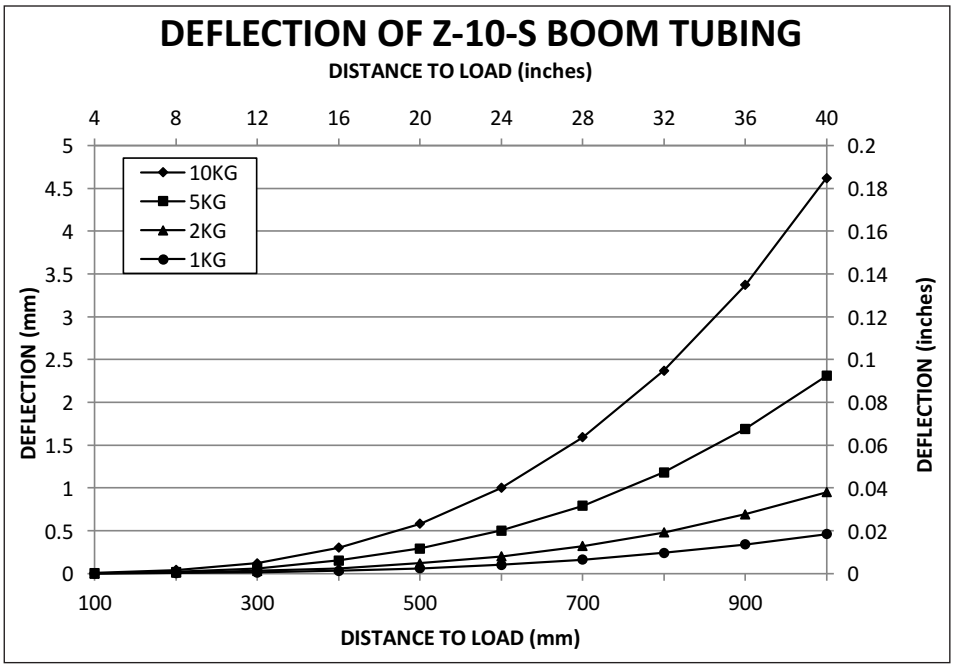

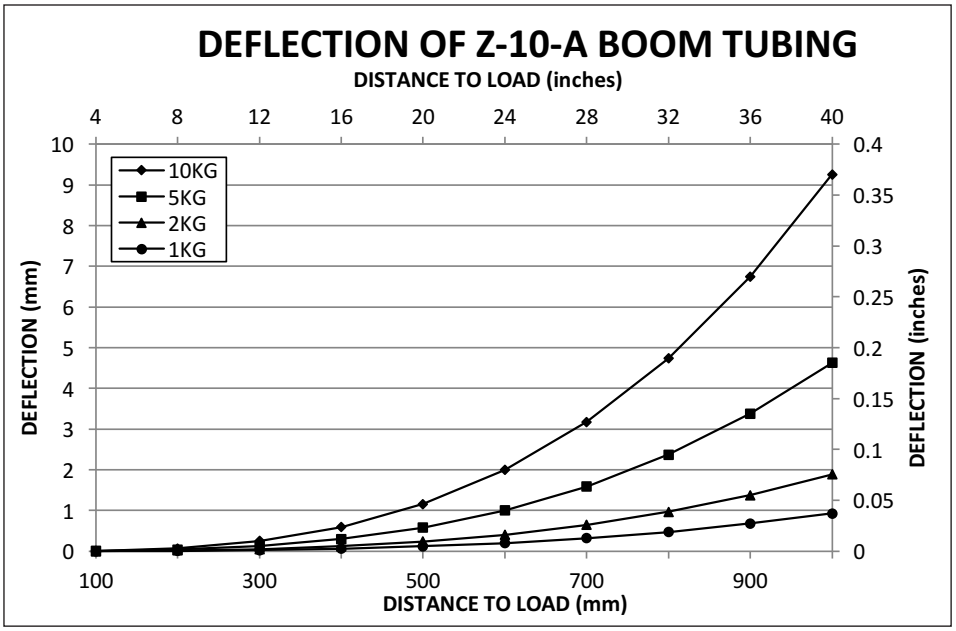

Dimensions in inches (mm) are for reference only

Aluminum and Steel Tubing
Z-10-X-XXXX

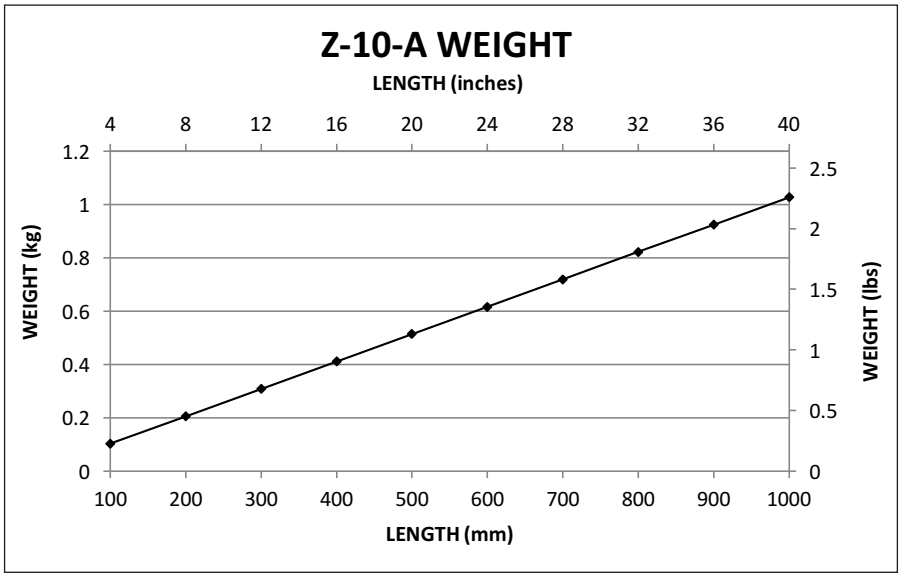

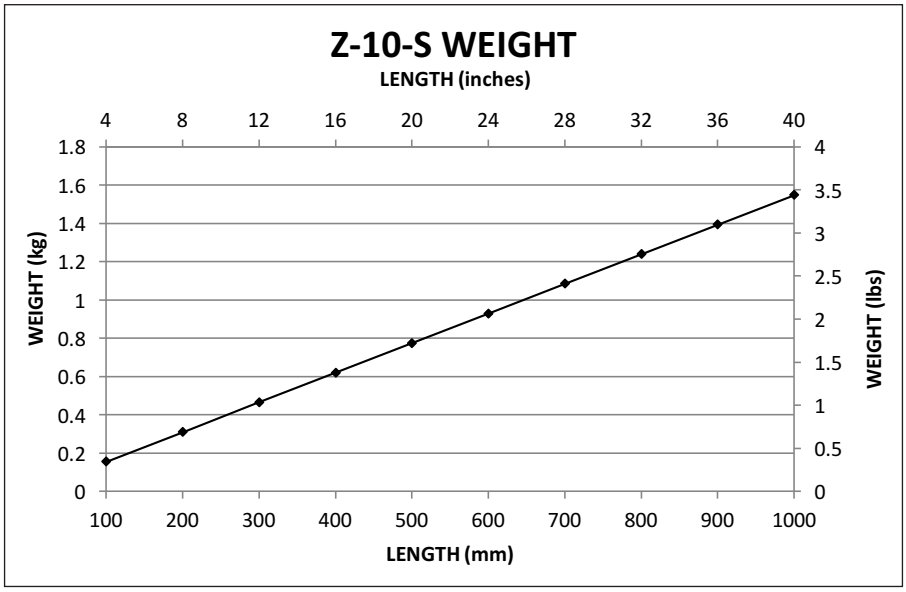

Dimensions in inches (mm) are for reference only

Aluminum and Steel Tubing
Z-15-X-XXXX

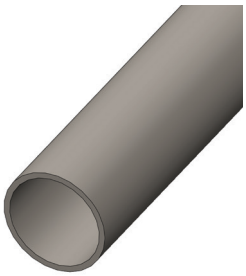

Order information

Z-15-X-XXXX

Diameter	Code
1.50" Boom Rod Tubing	**15**

Material	Code
Steel	**S**
Aluminum	**A**

Length, mm	Code
100	**100**
XXXX	**XXXX**
1200	**1200**

*Lengths available: 100 mm to 1200 mm in 100 mm increments

Technical data

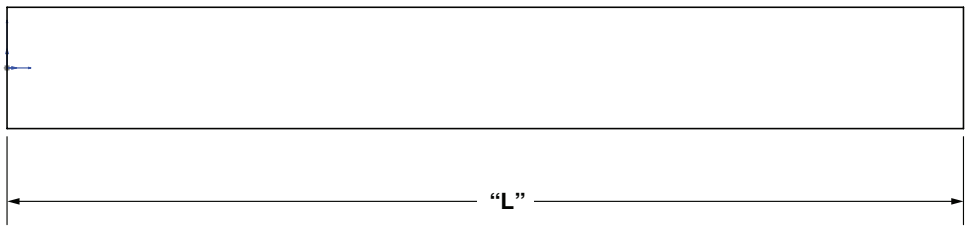

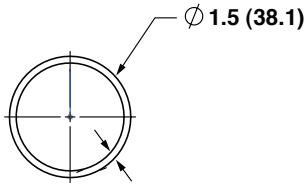

Aluminum = 0.25 (6.4)
Steel = 0.083 (2.1)

Dimensions in inches (mm) are for reference only

Aluminum and Steel Tubing
Z-15-X-XXXX

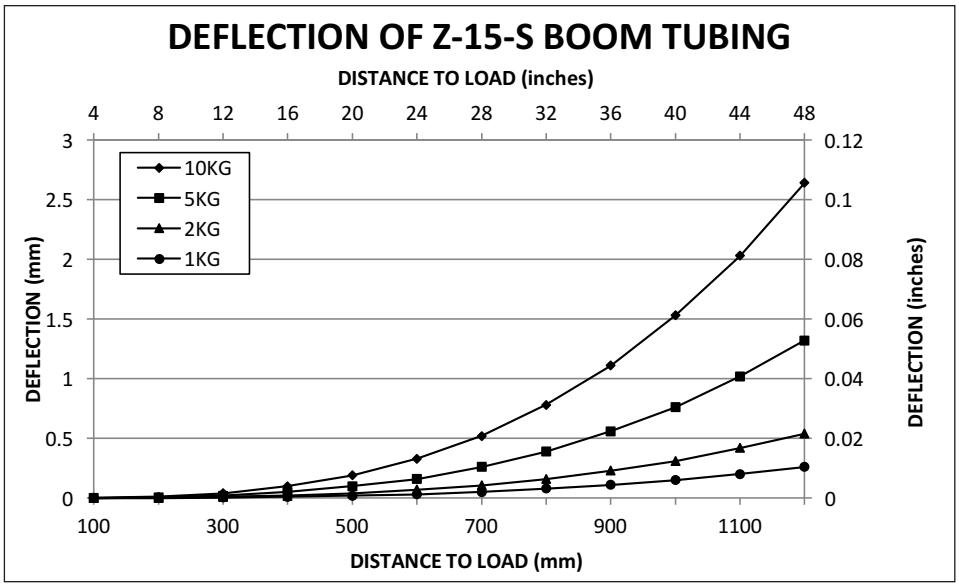

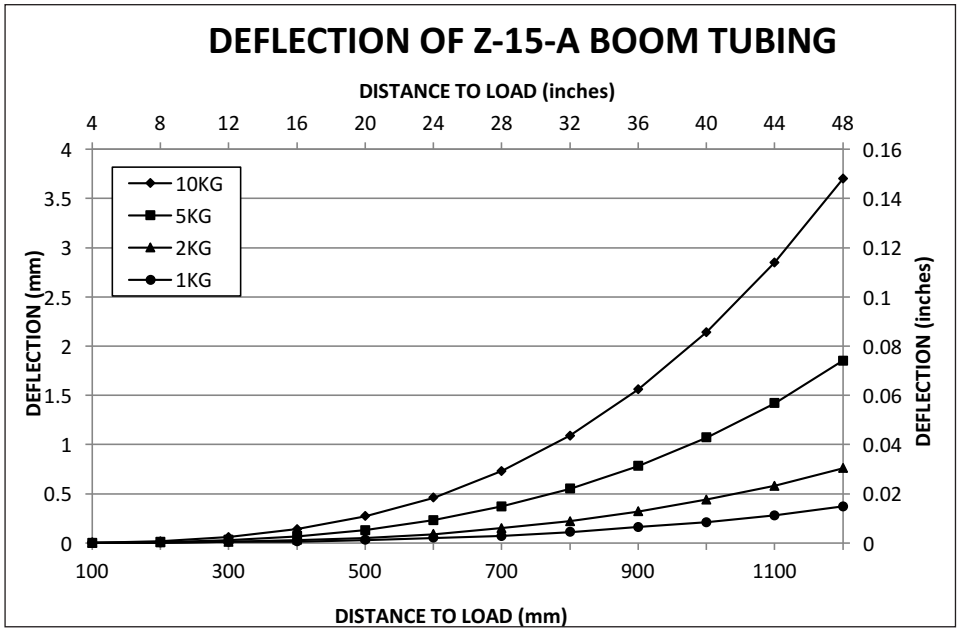

Dimensions in inches (mm) are for reference only

Aluminum and Steel Tubing
Z-15-X-XXXX

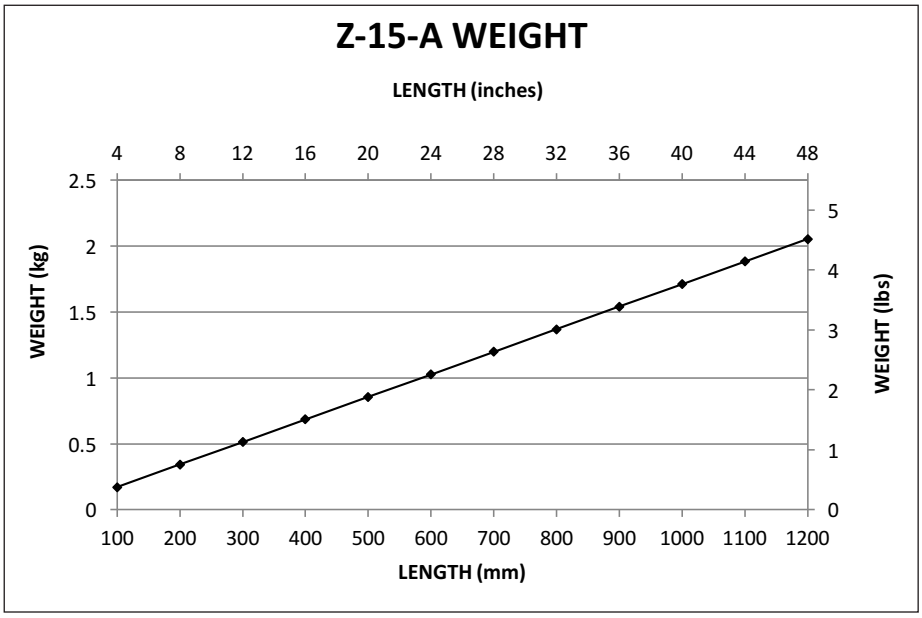

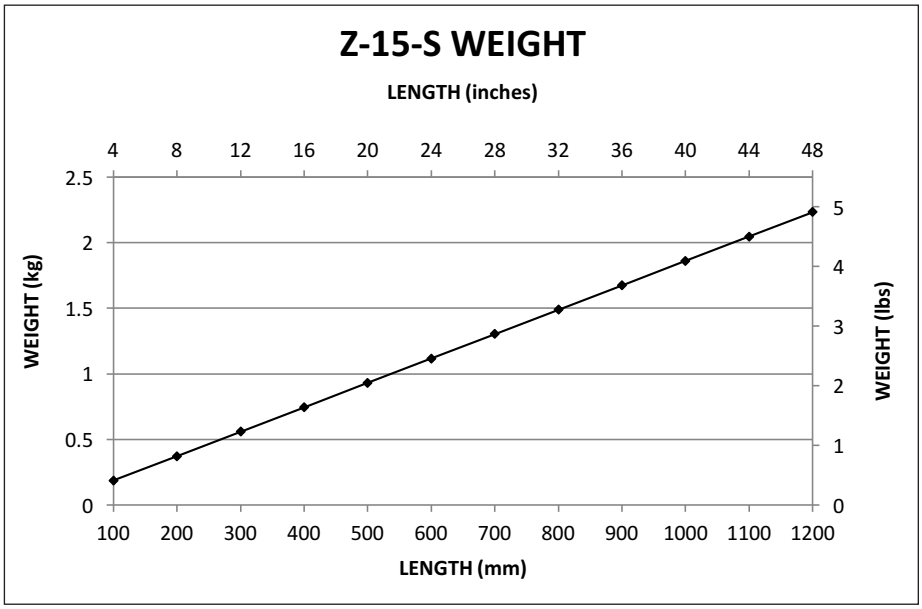

Dimensions in inches (mm) are for reference only

Aluminum and Steel Tubing
Z-25-X-XXXX

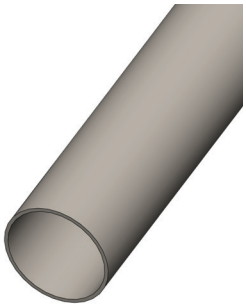

Order information

Z-25-X-XXXX

Diameter	Code
2.50" Boom Rod Tubing	**25**

Material	Code
Steel	**S**
Aluminum	**A**

Length, mm	Code
300	**300**
XXXX	**XXXX**
1500	**1500**

*Lengths available: 300 mm to 1500 mm in 300 mm increments

Technical data

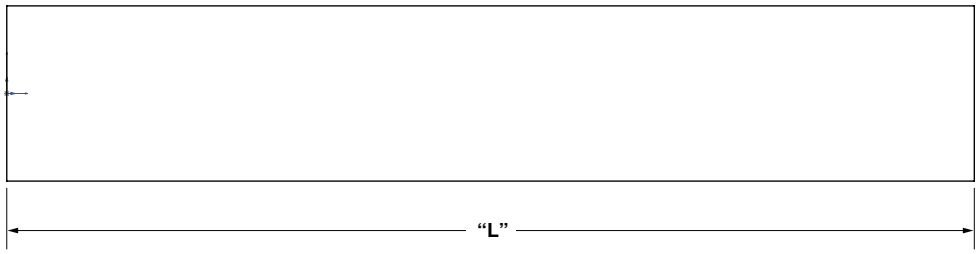

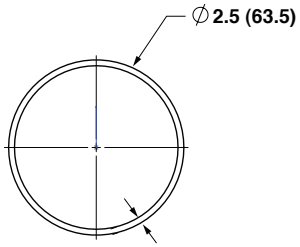

Aluminum = 0.25 (6.4)
Steel = 0.083 (2.1)

Dimensions in inches (mm) are for reference only

Aluminum and Steel Tubing
Z-25-X-XXXX

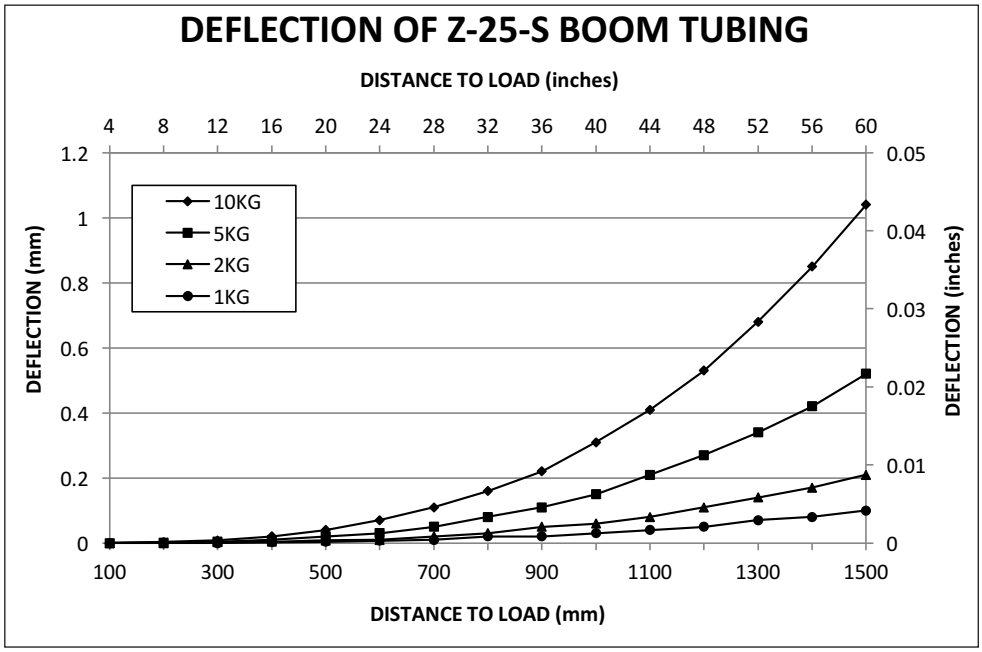

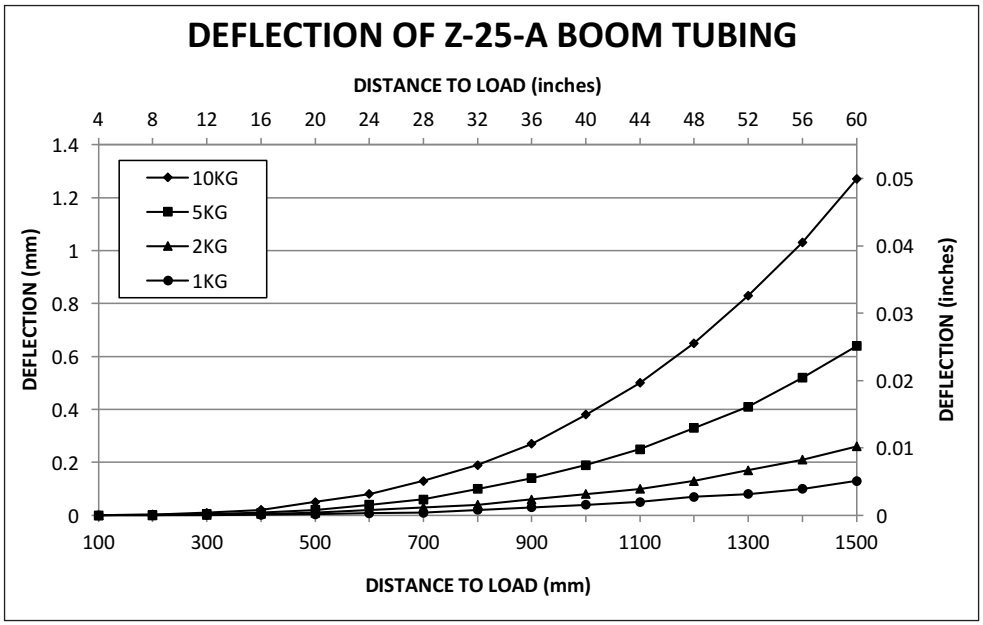

Dimensions in inches (mm) are for reference only

Aluminum and Steel Tubing
Z-25-X-XXXX

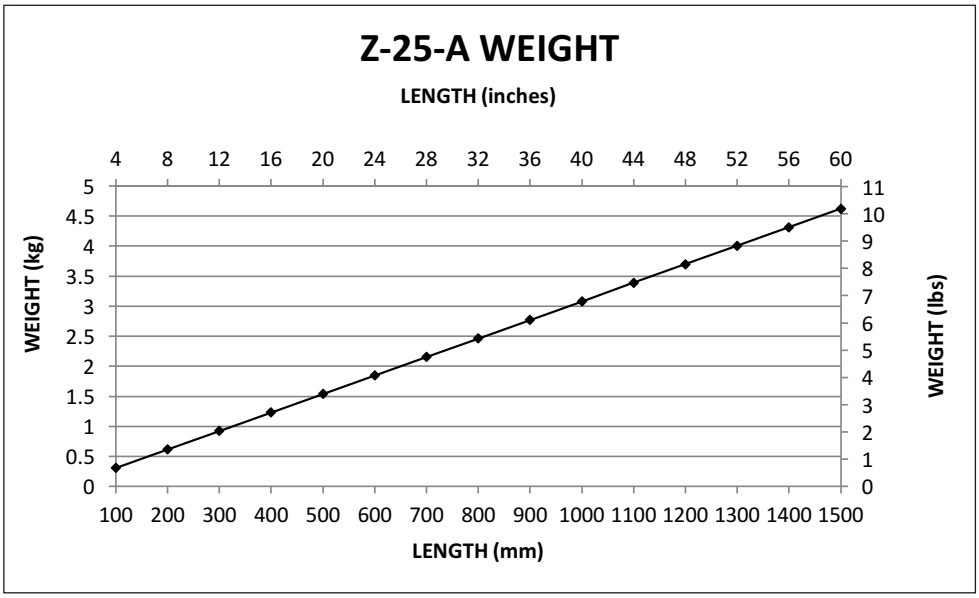

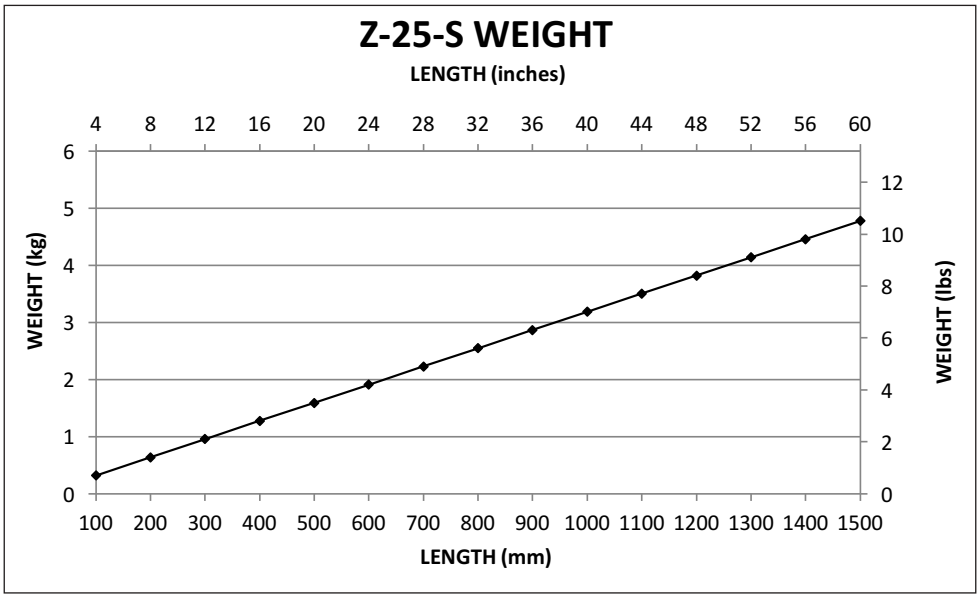

Dimensions in inches (mm) are for reference only

Aluminum and Steel Tubing
Z-25MM-X-XXX

Order information

Z-25MM-X-XXX

Diameter	Code
25 mm Boom Rod Tubing	**25MM**

Material	Code
Steel	**S**
Aluminum	**A**

Length, mm	Code
75	**75**
XXXX	**XXXX**
900	**900**

*Lengths available: 75 mm to 900 mm, in 25 mm

Technical data

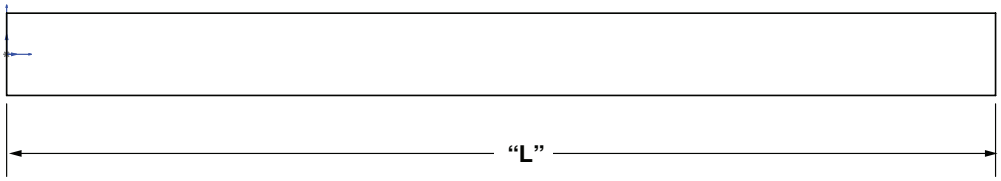

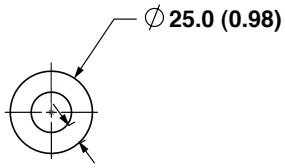

Aluminum = 6.2 (0.25)
Steel = 2.5 (0.109)

Dimensions in inches (mm) are for reference only

Aluminum and Steel Tubing
Z-25MM-X-XXX

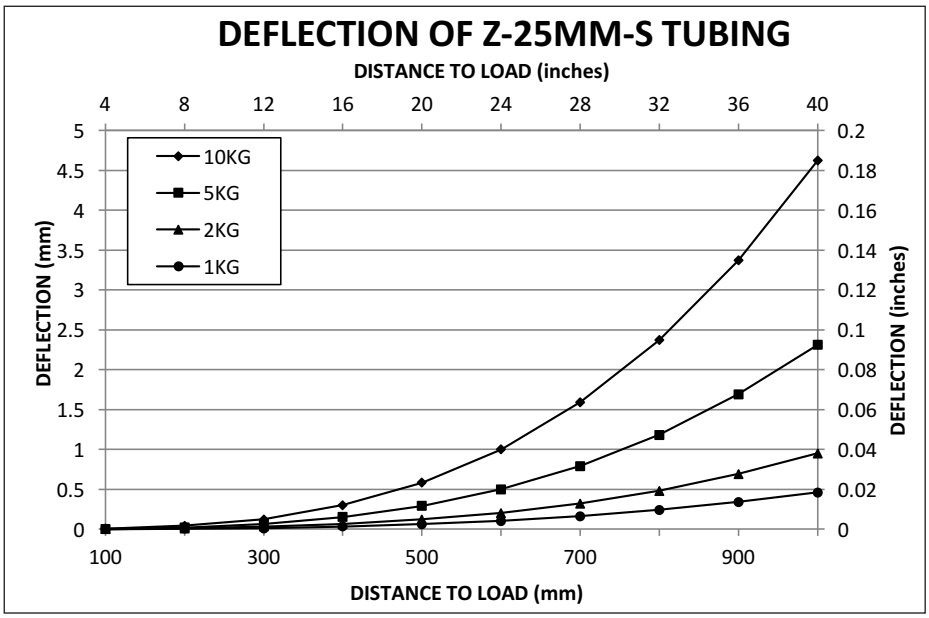

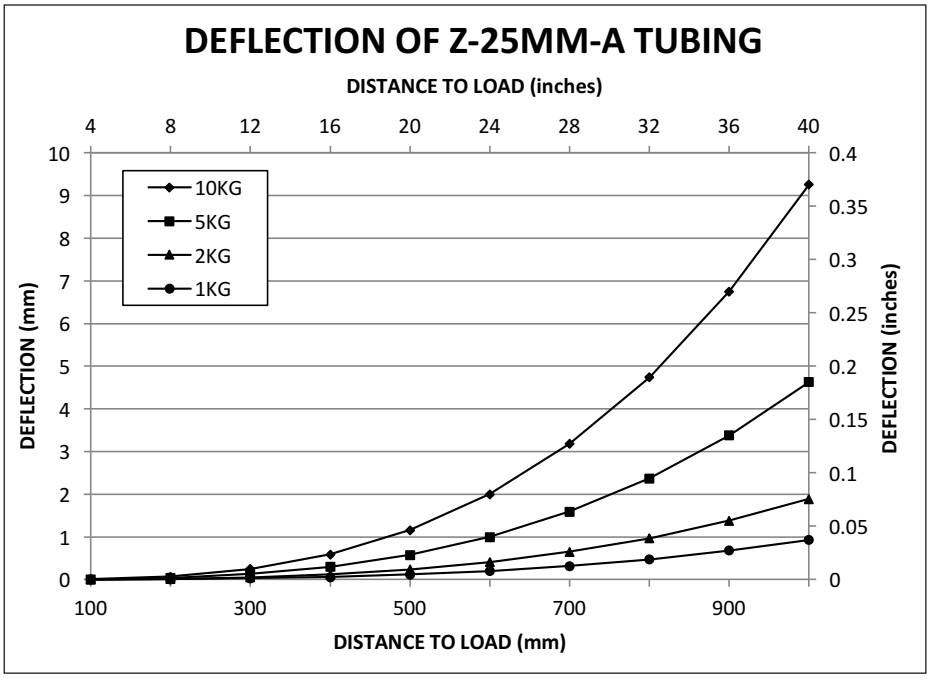

Dimensions in inches (mm) are for reference only

Aluminum and Steel Tubing
Z-25MM-X-XXX

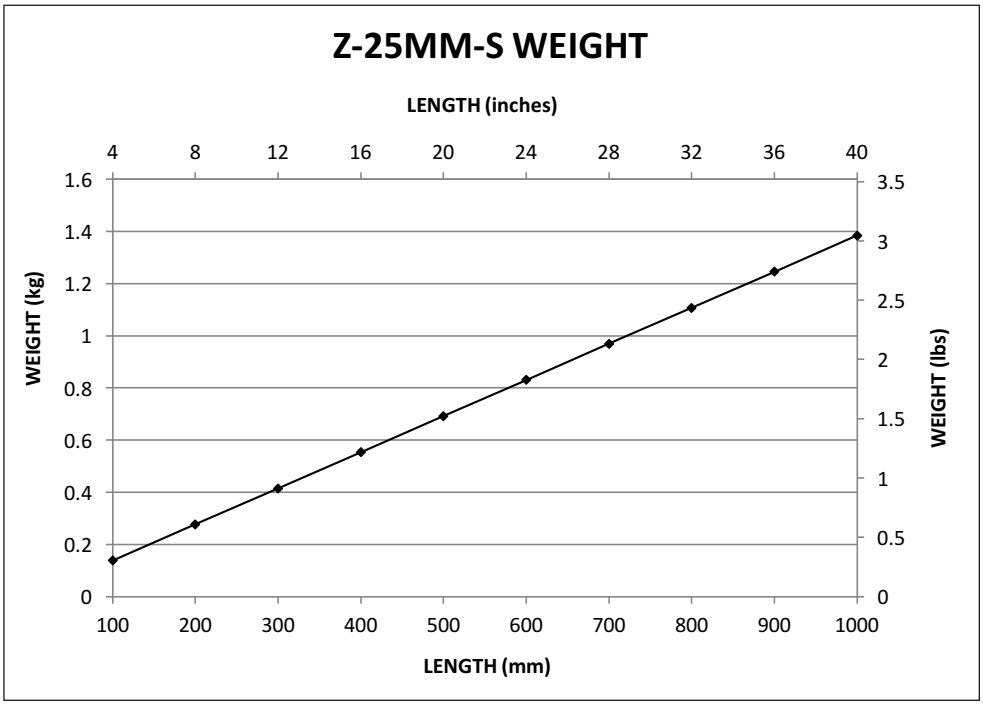

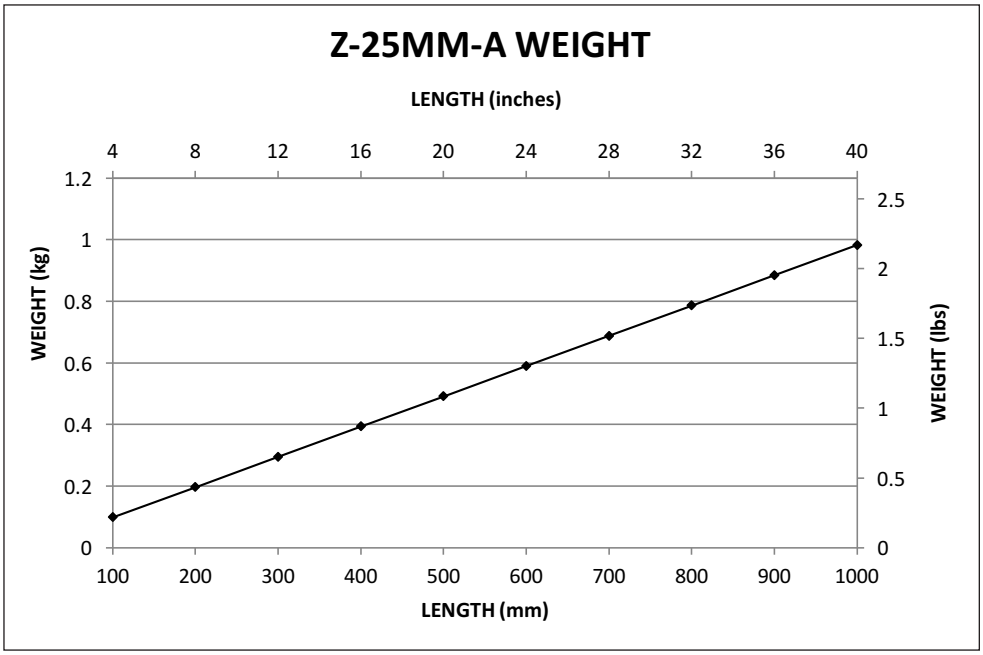

Dimensions in inches (mm) are for reference only

Aluminum and Steel Tubing
Z-40MM-X-XXXX

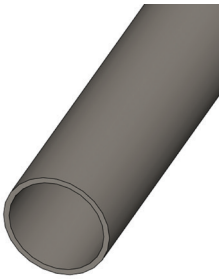

Order information

Z-40MM-X-XXXX

Diameter	Code
40 mm Boom Rod Tubing	**40MM**

Material	Code
Steel	**S**
Aluminum	**A**

Length, mm	Code
100	**100**
XXXX	**XXXX**
1200	**1200**

*Lengths available: 100 mm to 1200 mm, in 100 mm increments

Technical data

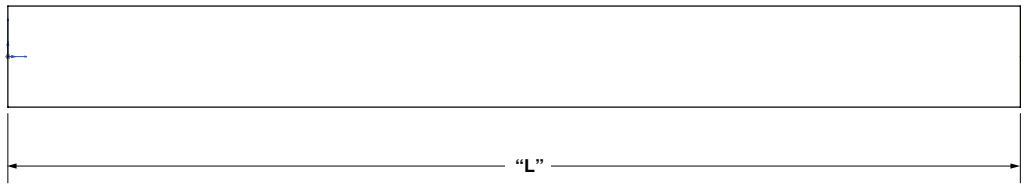

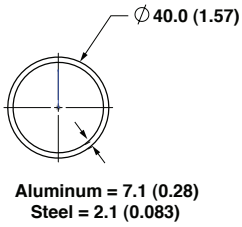

Dimensions in inches (mm) are for reference only

Aluminum and Steel Tubing
Z-40MM-X-XXXX

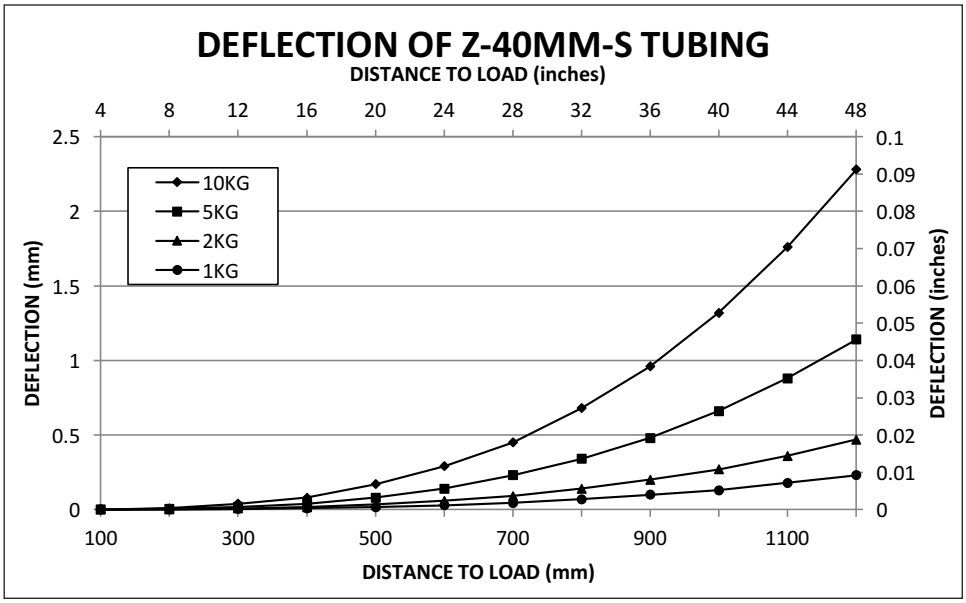

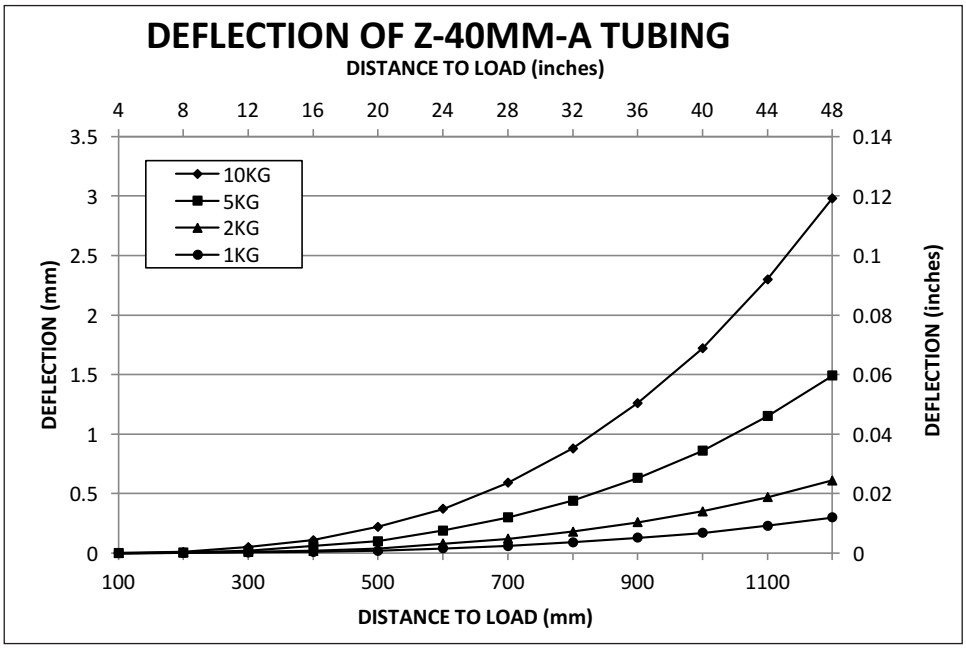

Dimensions in inches (mm) are for reference only

Aluminum and Steel Tubing
Z-40MM-X-XXXX

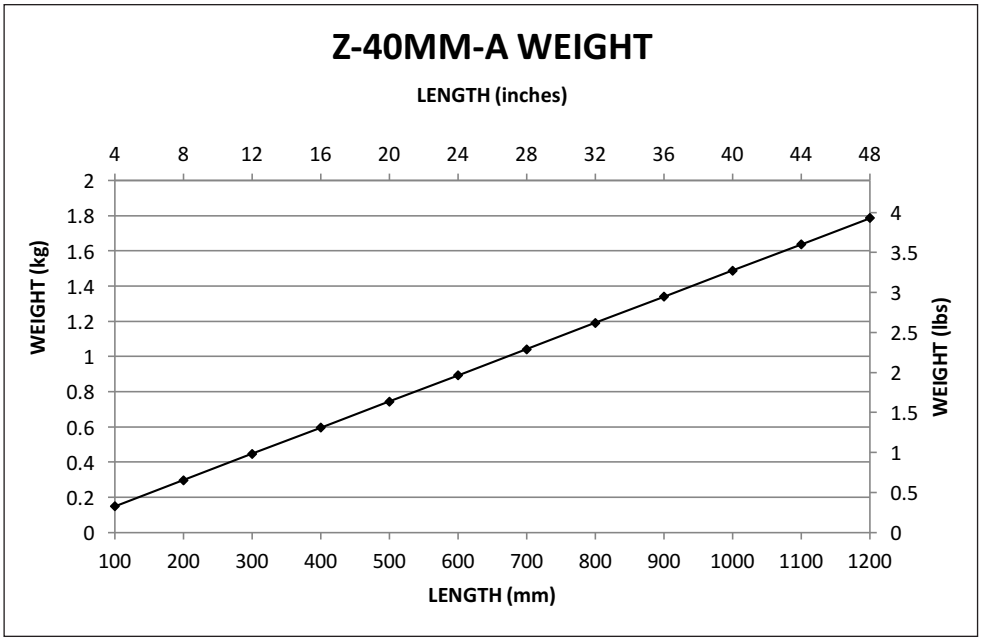

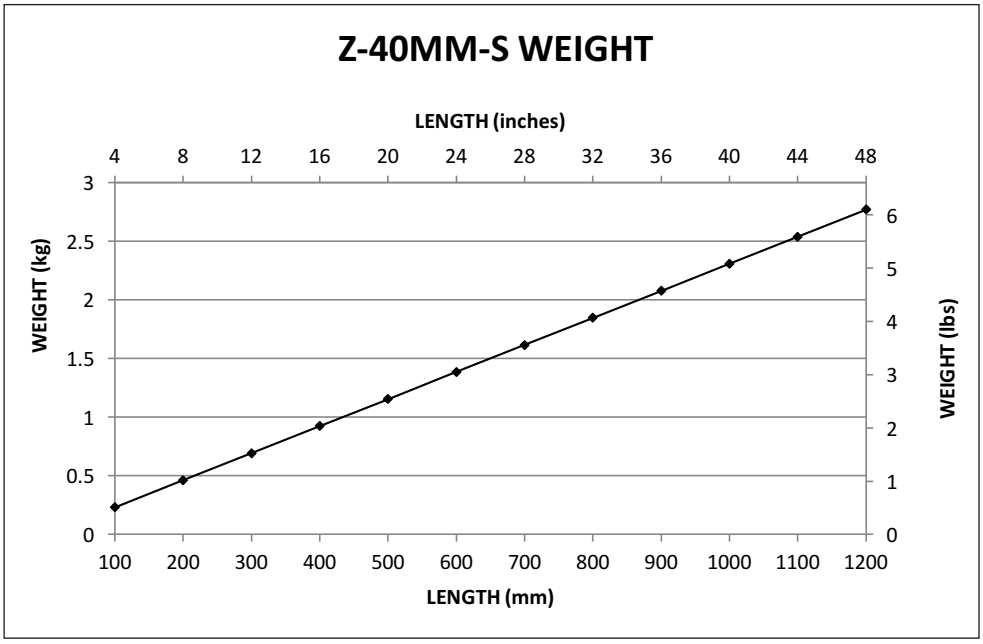

Dimensions in inches (mm) are for reference only

Aluminum and Steel Tubing
Z-60MM-X-XXXX

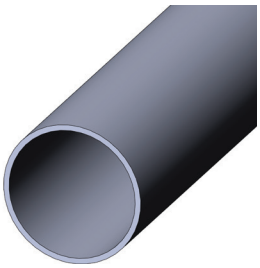

Order information

Z-60MM-X-XXXX

Diameter	Code
60 mm Boom Rod Tubing	**60MM**

Material	Code
Steel	**S**
Aluminum	**A**

Length, mm	Code
300	**300**
XXXX	**XXXX**
1500	**1500**

Lengths available: 300 mm to 1500 mm, in 300 mm increments

Technical data

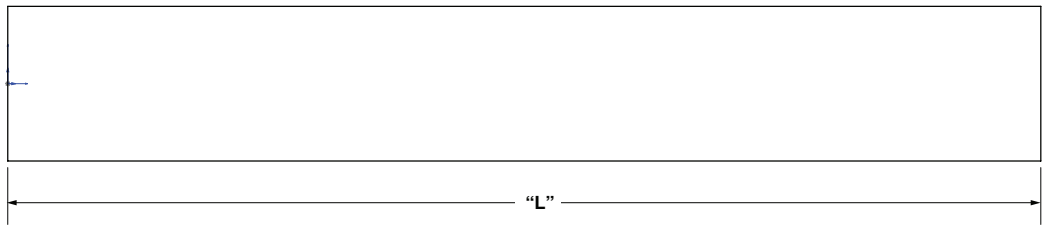

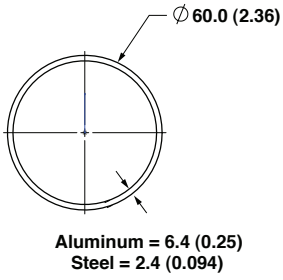

Dimensions in inches (mm) are for reference only

Featherweight Bracket Arms
LWBS10EXXXX

> 50% weight reduction from steel version
> Made with aircraft aluminum
> 1.00" clamp diameter, 1.00" aluminum stem diameter

Order information:

LWBS10EXXXX

Single

Length*	Code
100	0100
XXX	0XXX
800	0800

*Lengths available: 100 mm to 800 mm in 25 mm increments

Application notes
Load limits of 50 lbs-ft (67.5 Nm) recommended for 1.00" bracket arms.

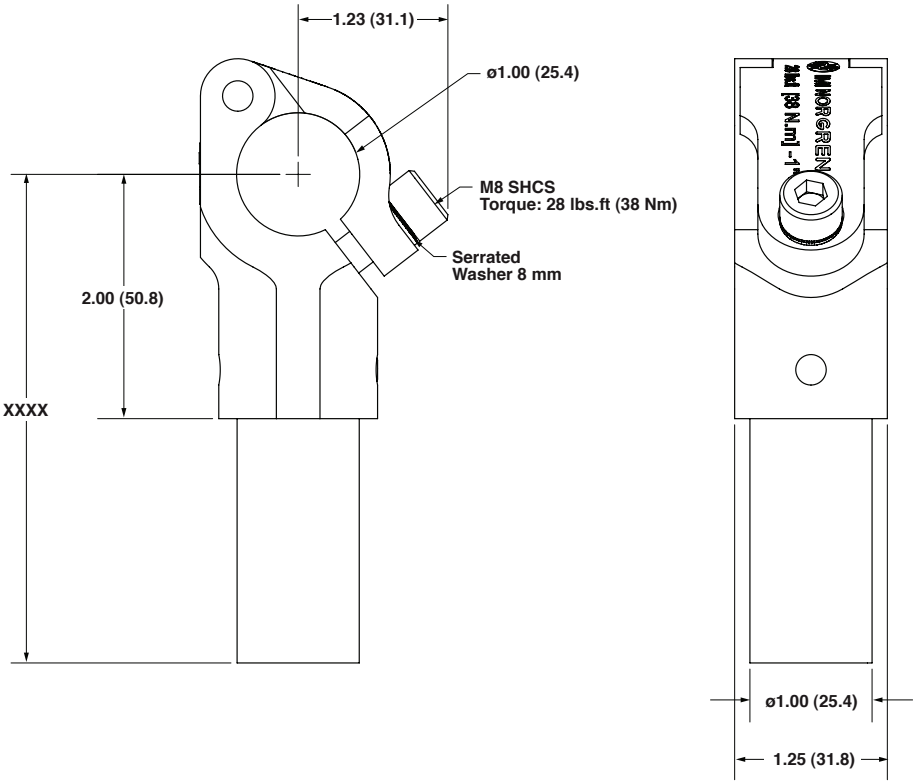

Dimensions in inches (mm) are for reference only

Featherweight Bracket Arms
LWBS10EXXXX

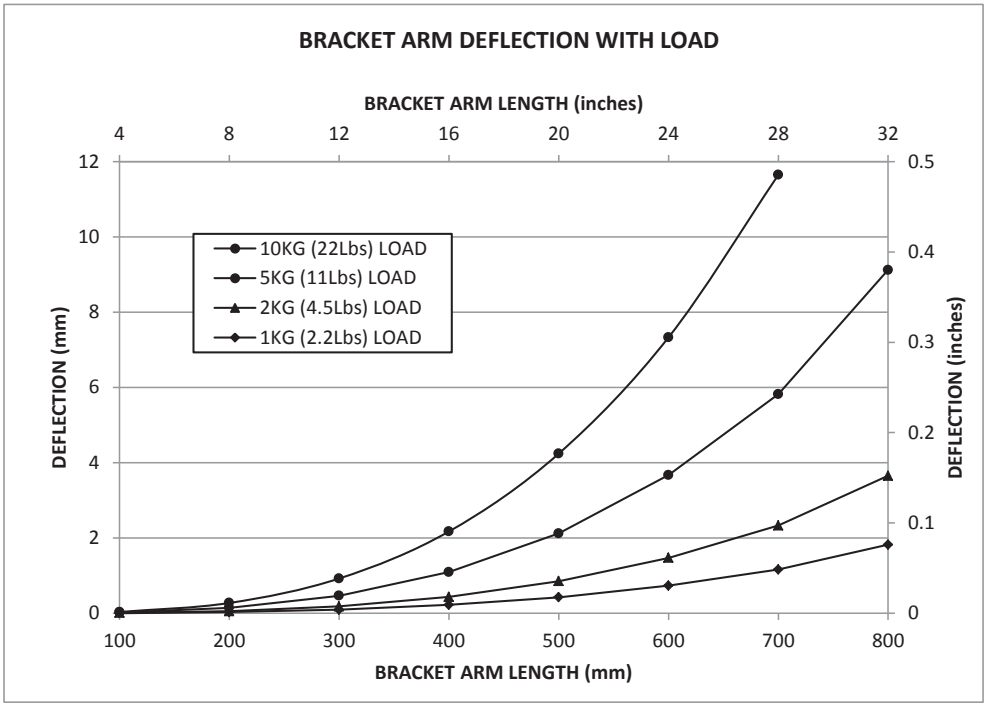

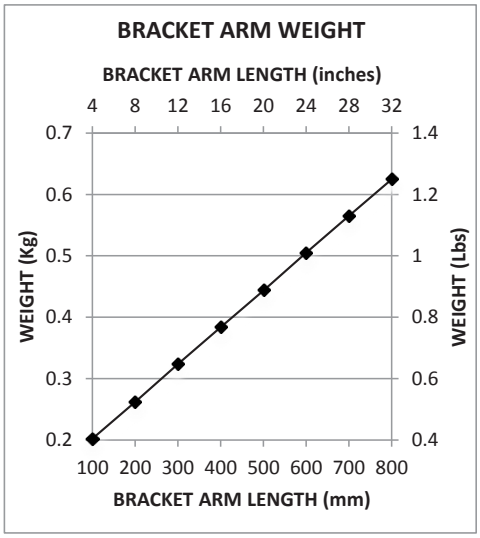

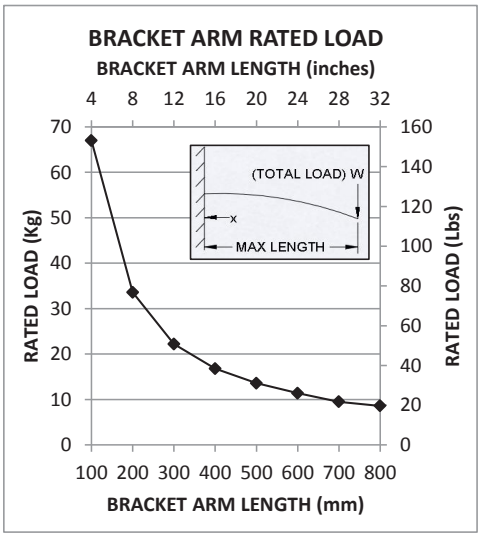

Dimensions in inches (mm) are for reference only

Featherweight Bracket Arms
LWBD10EXXXXA

> Aluminum version
> 1.00" clamp diameter, 1.00" steel stem diameter

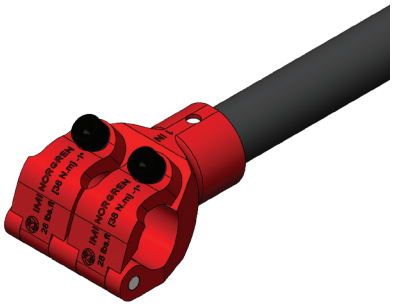

Order information:

LWBD10EXXXXA

- Double
- Aluminum

Length*	Code
100	0100
XXX	0XXX
800	0800

*Lengths available: 100 mm to 800 mm in 25 mm increments

Application notes

Load limits of 50 lbs-ft (67.5Nm) recommended for 1.00" bracket arms.

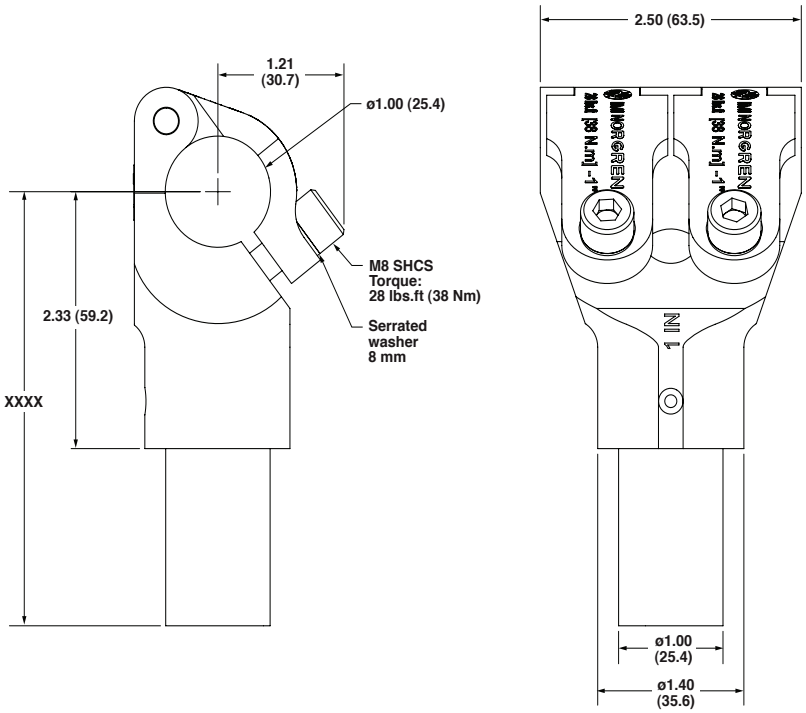

Dimensions in inches (mm) are for reference only

Featherweight Bracket Arms
LWBS10EXXXX

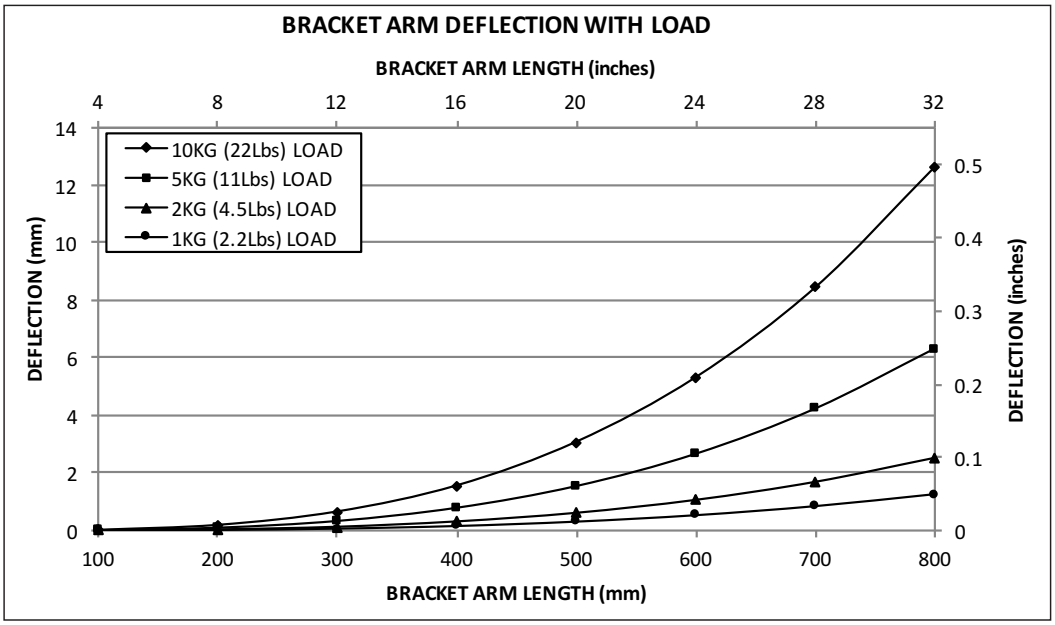

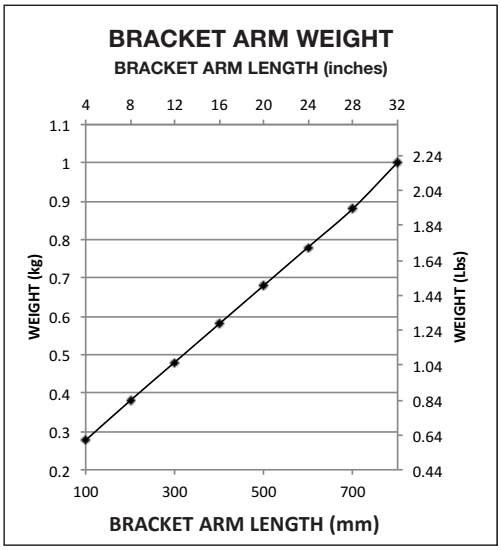

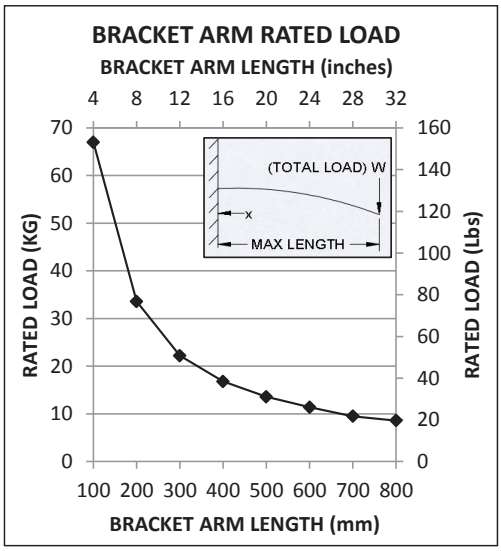

Dimensions in inches (mm) are for reference only

EA Bracket Arm
EA-00712-XXX

> 25 mm clamp to 25 mm aluminum stem
> Made with aircraft aluminum

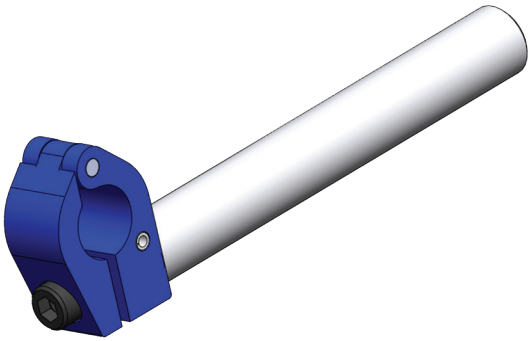

Order information

EA-00712- XXX

Length, mm	Code
75	**75**
XXX	**XXX**
600	**600**

*Lengths available: 75 mm to 600 mm, in 25 mm increments

Application notes

Load limits of 50 lbs-ft (67.5 Nm) recommended for 25 mm bracket arms.

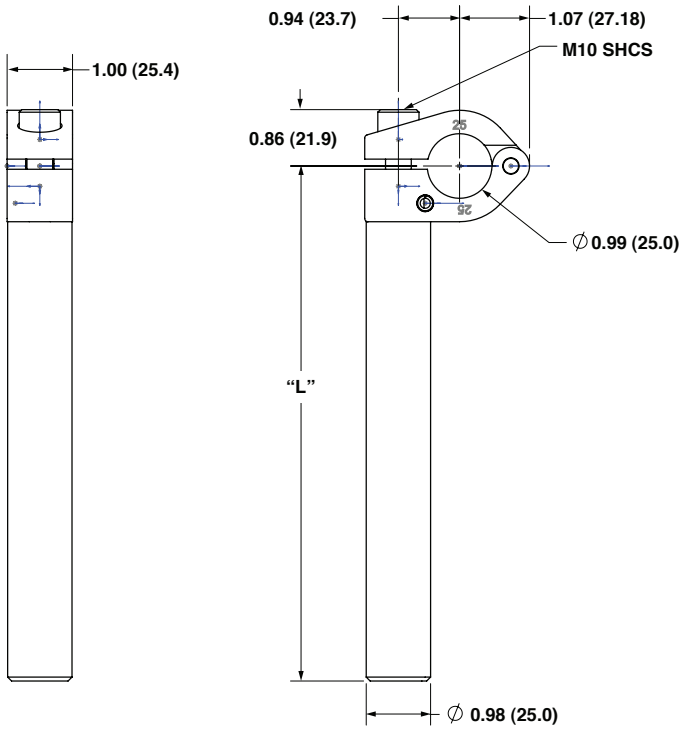

Dimensions in inches (mm) are for reference only

EA Bracket Arm
EA-00712-XXX

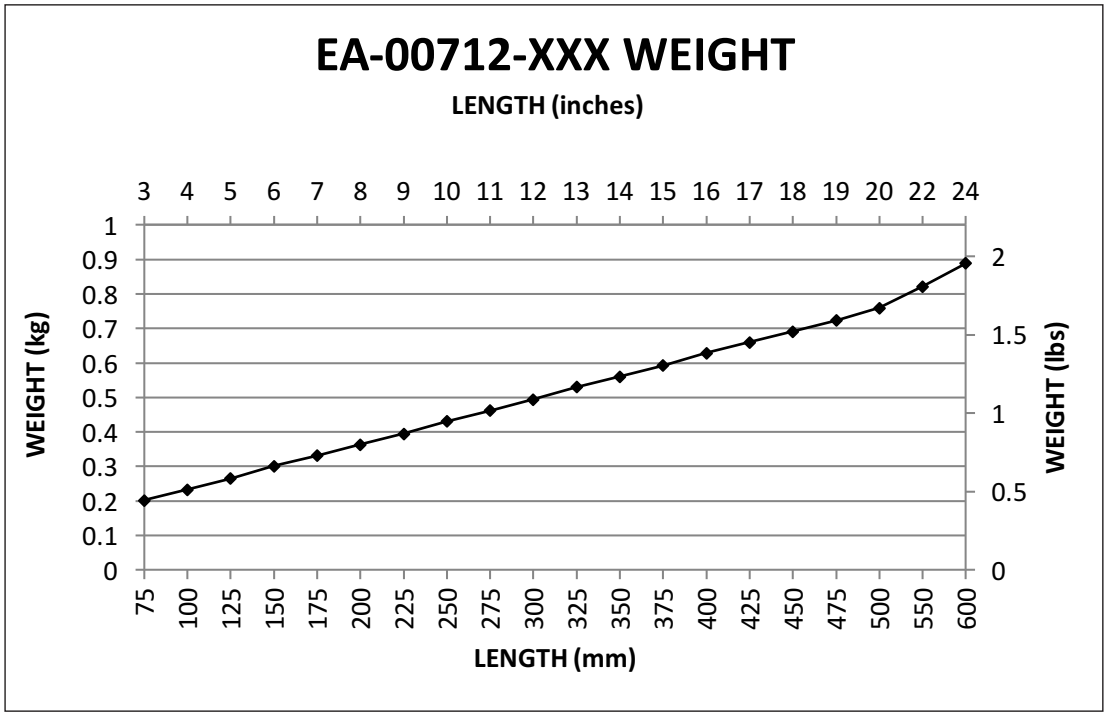

Dimensions in inches (mm) are for reference only

Ultra Mount Bracket – Metric Hardware
XUMB-XX-XXX-X

> Clamps to tooling arms and extends out to a ball or core clamp
> Locking rotation adjusts in 30º increments

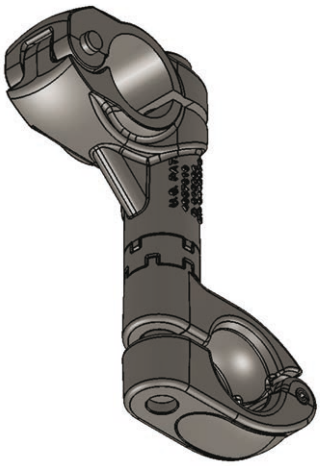

Order information

XUMB-XX-XXX-X

Bore Diameter

Length	Code
1 in	**1**
25 mm	**25**

Length

Length, A	Code
75 mm	**75**
105 mm	**105**
125 mm	**125**
155 mm	**155**
175 mm	**175**
205 mm	**205**

Mount	Code
Core Mount	**C**
None	**Blank**

Technical data

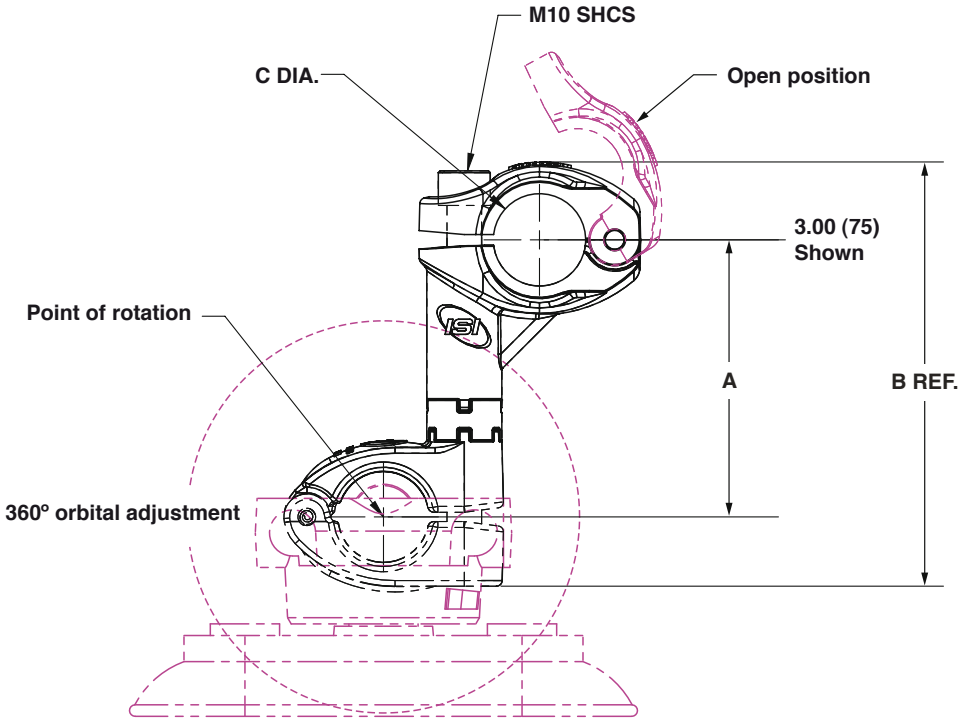

Dimensions in inches (mm) are for reference only

Ultra Mount Bracket – Metric Hardware
XUMB-XX-XXX-X

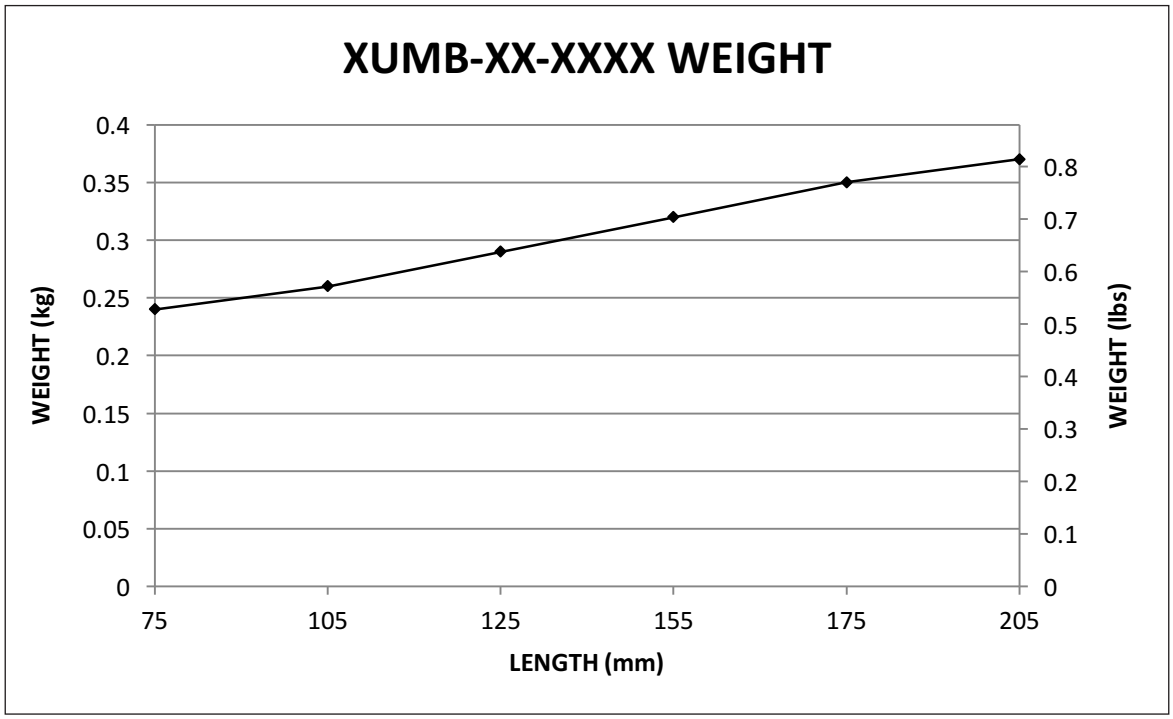

Dimensions in inches (mm) are for reference only

HD Ultra Arm Clamp Bracket
TB1A-XXX-XXX-X

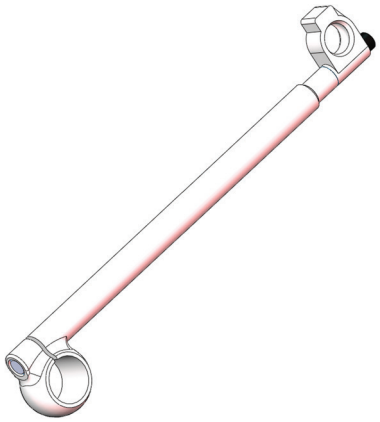

Order information

TB1A-XXX-XXX-X

Bore Diameter	Code
1.50"	**15E**
40 mm	**40M**

Length, A	Code
100mm	**100**
XXX	**XXX**
600mm	**600**

*Lengths available: 300 mm to 1500 mm in 300 mm increments

Mount	Code
Core Mount	**C**
None	**Blank**

Technical data

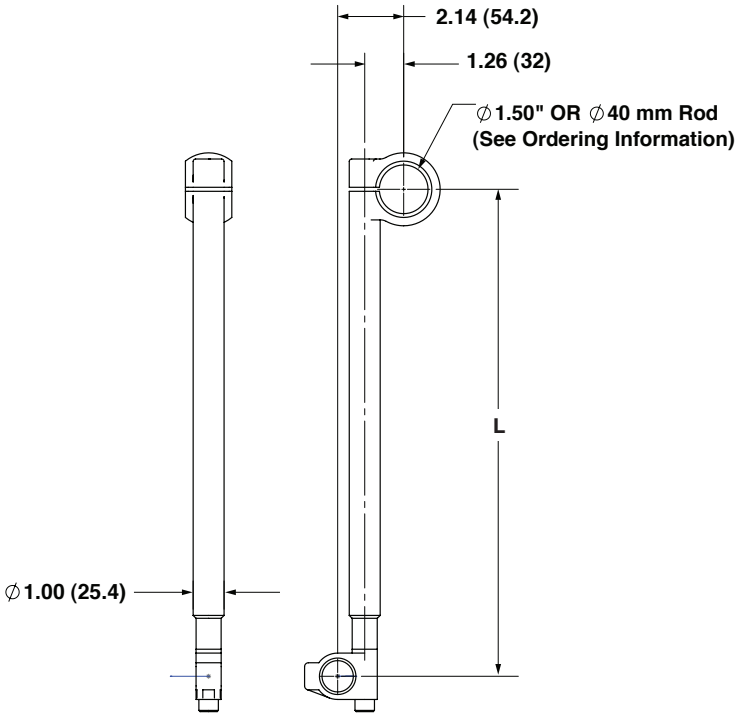

Dimensions in inches (mm) are for reference only

Ultra Arm
TB1A-XXX-XXX-X

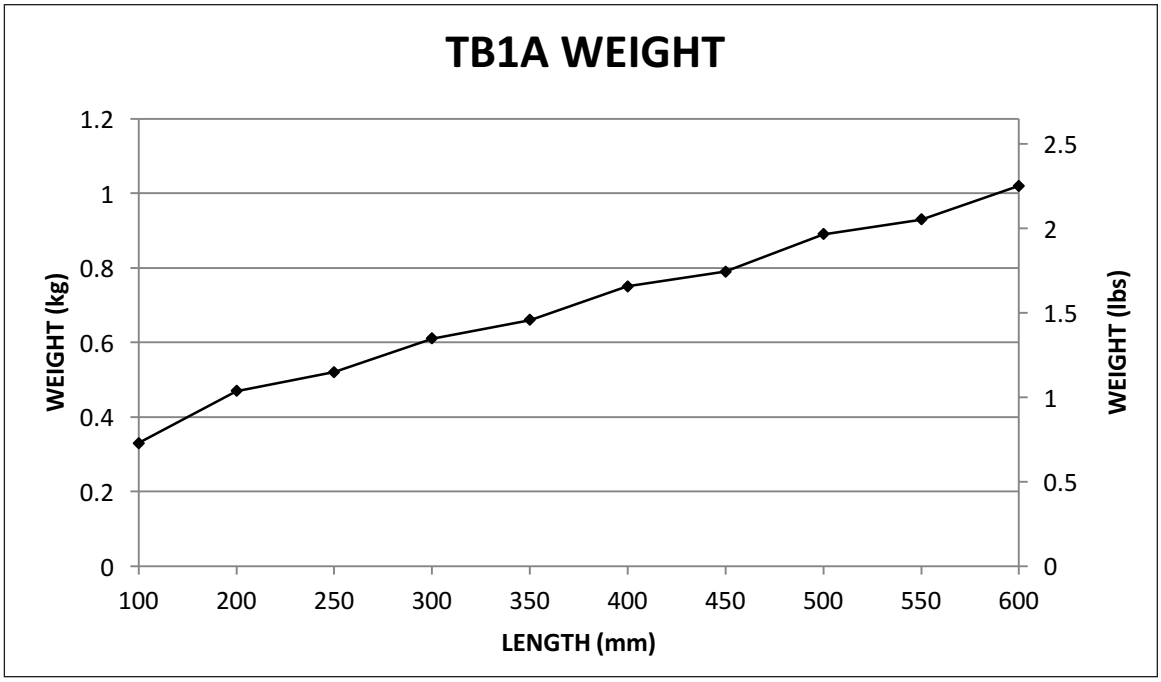

Dimensions in inches (mm) are for reference only

Telescoping Ultra Arm
1" & 25 mm IOT
IOTXXXXXXX

> Interchangeable with UMB tooling
> Mounts to various cup mounts and venturi
> Easy to adjust and lock in place

IOTXXXXXXX

Type	Code
Telescoping Ultra Arm	IOT

Tube Diameter	Code
1"	100
25 mm	025

Description	Code
Metric	M

Min. Length	Code
2.5"	2
3"	3
4"	4
6"	6
7"	7
8"	8
9"	9
11"	11
13"	13
15"	15

Clamp Type	Code
Ball	B

Code	Travel	Minimum Travel Length					
		2.5"	3"	4"	6"-7"	8"-9"	11"-15"
0	0.5"	√	-	-	-	-	-
1	1"	-	√	-	-	-	-
2	2"	-	-	√	√	√	-
4	4"	-	-	-	-	√	√

√ Available configuration

Technical data

Weight:
1.56 lbs / 707 g

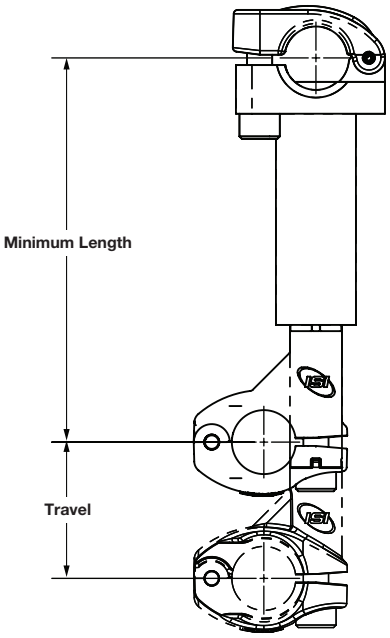

Dimensions in inches (mm) are for reference only

Our policy is one of continued research and development. We therefore reserve the right to amend, without notice, the specifications given in this document. © 2017 Norgren Automation Solutions, LLC

Featherweight Ball Clamp
LWBC10E0025

> Can be used in applications where ball rotation is not required
> Can be used with 1.125" ball or 1.125" ball
> Lighter than IMI Norgren Ultra Arm Series

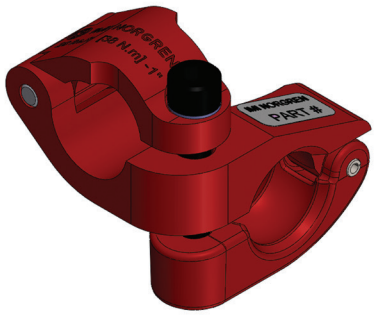

Order information:

LWBC10E0025

Model Designation

Application notes

Load limits of 50 lbs-ft (67.5 Nm) recommended for 1.00" ball clamp.
Weight 0.35 lbs. (0.16 Kg)

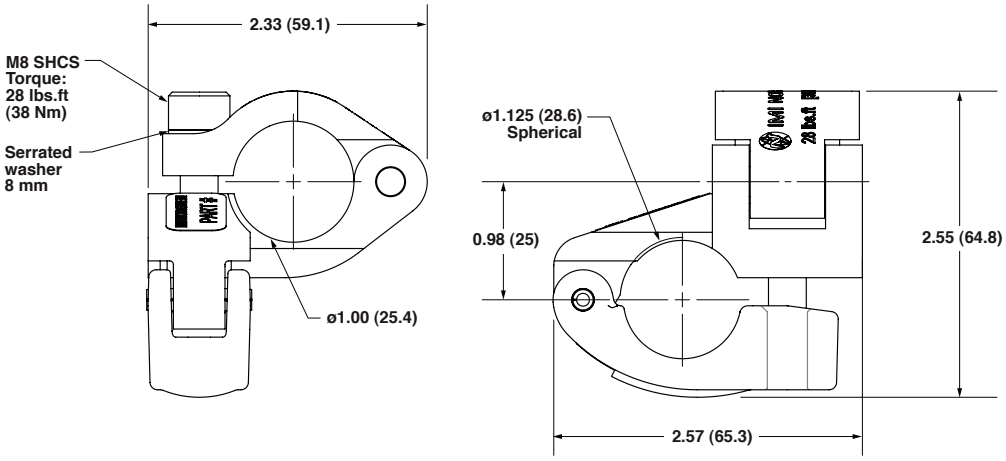

Dimensions in inches (mm) are for reference only

Featherweight Tooling T-Clamps
LWTCXXXXXX

> Lightweight clamp to provide a 90° connection between tubes

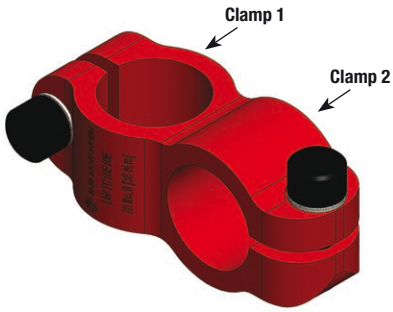

Order information:

LWTCXXXXXX

Clamp 1 Description	Code	Clamp 2 Description	Code
1.00"	10E	1.00"	10E
1.50"	15E	1.50"	15E
25mm	25M	25mm	25M
40mm	40M	40mm	40M

Application notes

Load limits of 100 ft-lbs [135 Nm] recommended for 1.50" and 40mm clamps
Load limits of 50 ft-lbs [67.5 Nm] recommended for 1.00" and 25mm clamps

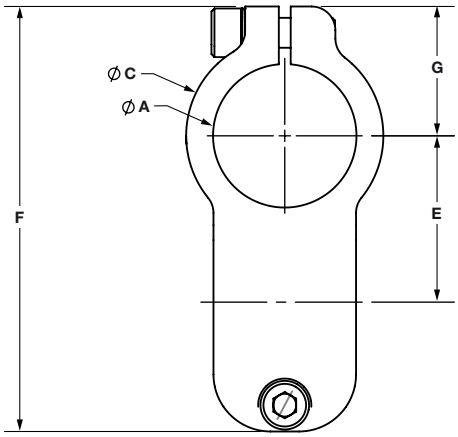

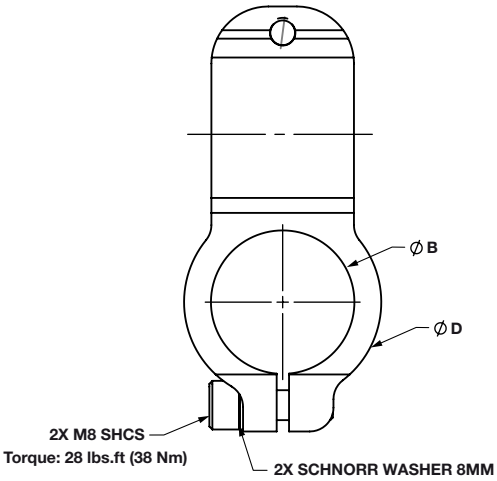

Standard parts

CATALOG #	LWTC10E10E	LWTC10E15E	LWTC15E15E	LWTC25M25M	LWTC25M40M	LWTC40M40M
"A"	1.00 (25.4)	1.50 (38.1)	1.50 (38.1)	.984 (25)	1.57 (40)	1.57 (40)
"B"	1.00 (25.4)	1.00 (25.4)	1.50 (38.1)	.984 (25)	.984 (25)	1.57 (40)
"C"	1.40 (35.6)	2.08 (52.8)	2.08 (52.8)	1.40 (35.6)	2.08 (52.8)	2.08 (52.8)
"D"	1.40 (35.6)	1.40 (35.6)	2.08 (52.8)	1.40 (35.6)	1.40 (35.6)	2.08 (52.8)
"E"	1.16 (29.5)	1.50 (38.1)	1.75 (44.5)	1.16 (29.5)	1.50 (38.1)	1.75 (44.45)
"F"	3.36 (85.3)	3.96 (100.6)	4.47 (113.5)	3.36 (85.3)	3.96 (100.6)	4.47 (113.5)
"G"	1.10 (27.9)	1.36 (34.5)	1.36 (34.5)	1.10 (27.9)	1.36 (34.5)	1.36 (34.5)
Weight	0.19 lbs (86 g)	0.36 lbs (163 g)	0.56 lbs (252 g)	0.19 lbs (86 g)	0.34 lbs (152 g)	0.44 lbs (199 g)

Dimensions in inches (mm) are for reference only

Poz-E-Lok
ZA-XXX-XXX

> Toothed clamps provide a locked system which delivers excellent holding strength
> All clamps are interchangeable with adapters that use the gear tooth interface
> Toothed gear provides 7.5° of incremental adjustment

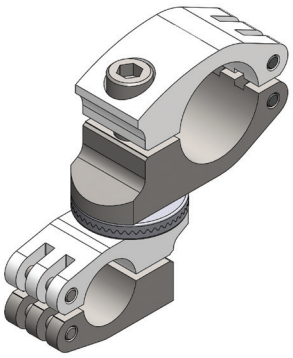

Order information:

ZA-XXX-XXX

Model	Code
	ZA

Clamp 1	Code
Ø 1.00 in Clamp, Smooth	10
Ø 1.50 in Clamp, Smooth	15
Ø 25 mm Clamp, Smooth	25
Ø 25 mm Clamp, Toothed	25N
Ø 40 mm Clamp, Smooth	40
Ø 40 mm Clamp, Toothed	40N

Clamp 2	Code
Ø1.00in Clamp, Smooth	10
Ø 1.50 in Clamp, Smooth	15
Ø 25 mm Clamp, Smooth	25
Ø 25 mm Clamp, Toothed	25N
Ø 40 mm Clamp, Smooth	40
Ø 40 mm Clamp, Toothed	40N

Technical data

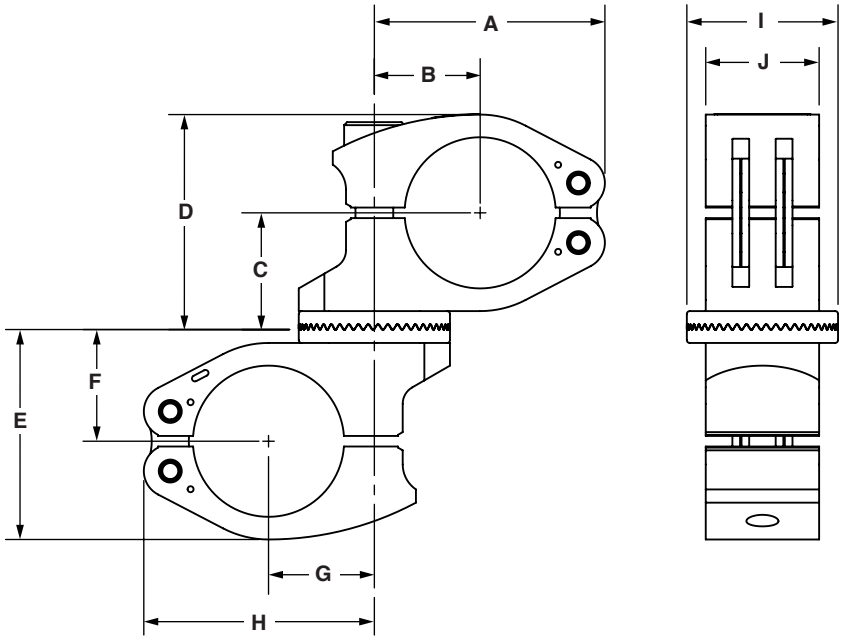

	ZA-40N-40N
A	2.40 (61)
B	1.10 (28)
C	1.21 (30.8)
D	2.24 (56.8)
E	2.24 (55.6)
F	1.16 (29.6)
G	1.10 (28)
H	2.40 (61)
I	1.57 (40)
J	1.18 (30)
Weight	0.98 lbs / 445 g

Dimensions in inches (mm) are for reference only

Single Mount, 2.5" Boom to 1.0" Rods
TM2A

> Single 90º tube clamp
> Made with aircraft aluminum

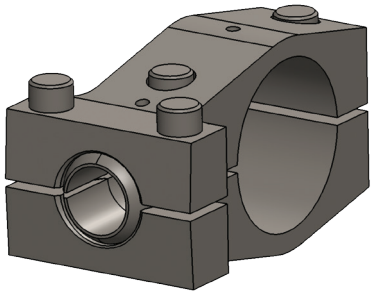

Order information

TM2A

↓

Model Designation

Technical data

Weight:
1.77 lbs (0.80 kg)
Material:
Aluminum

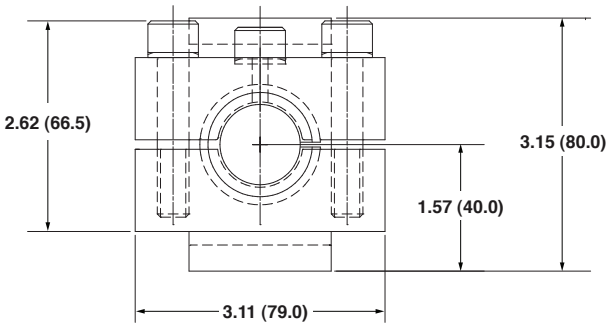

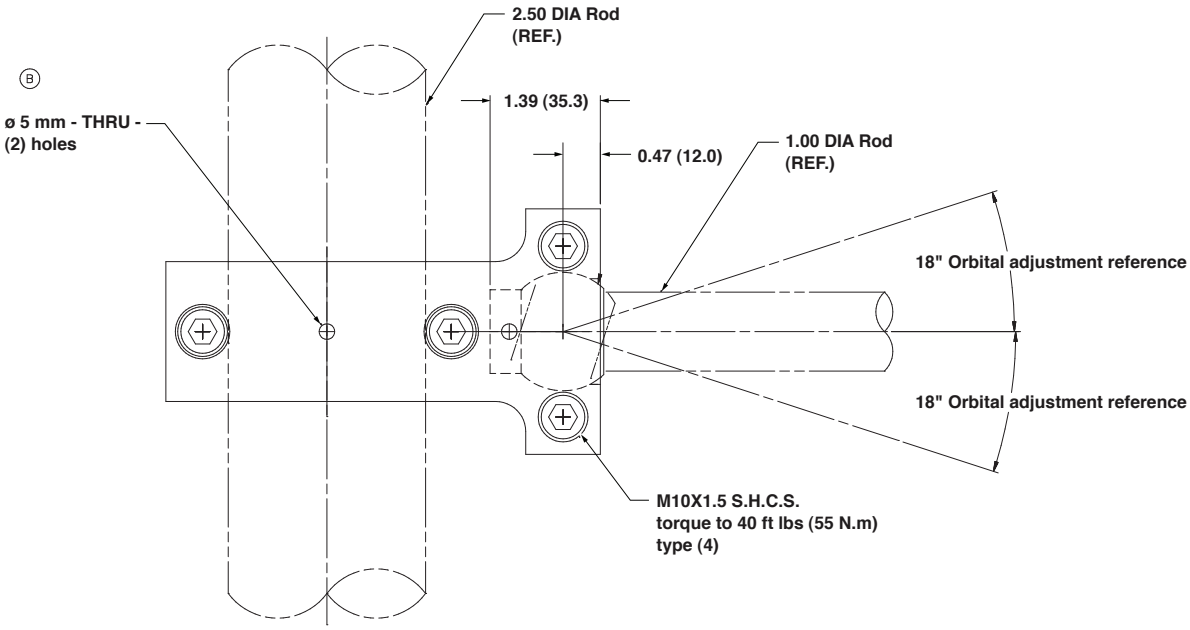

Dimensions in inches (mm) are for reference only

Single Mount, 40 mm Boom to 40 mm Rod TM4B

> Single 90º tube clamp
> Made with aircraft aluminum

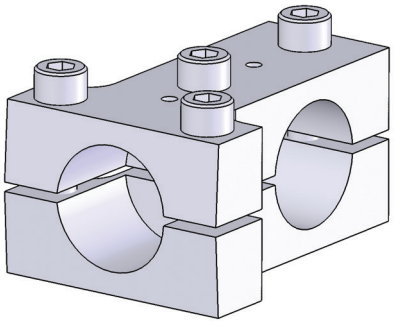

Order information

TM4B

Model Designation

Technical data

Weight:
1.64 lbs. (0.74 kg)
Material:
Aluminum

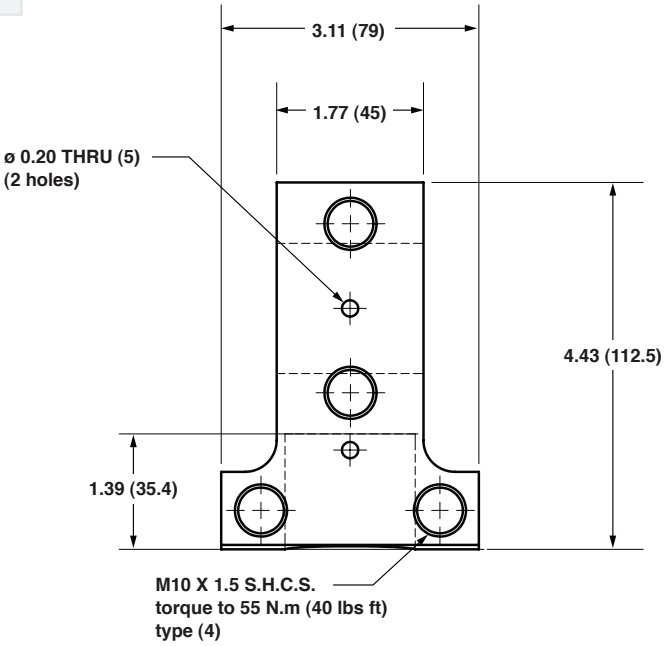

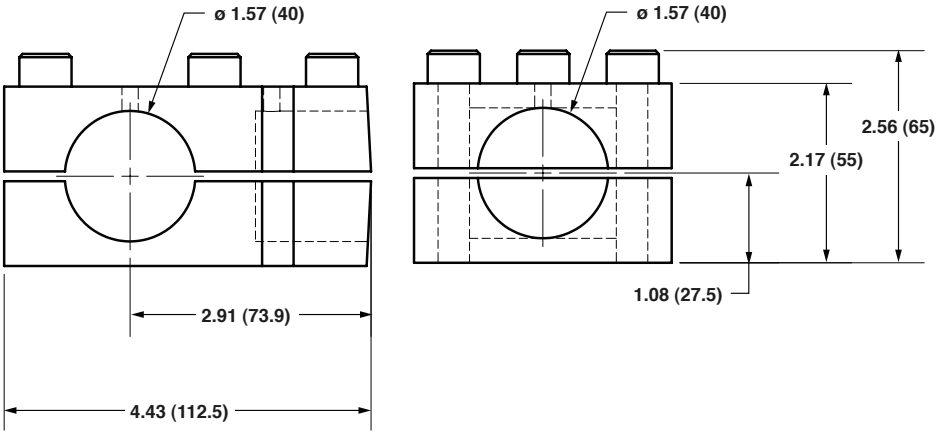

Dimensions in inches (mm) are for reference only

Double Mount
TMXX

> Double 90° tube clamp
> Made with aircraft aluminum

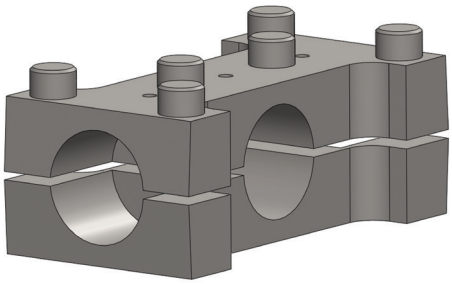

Order information

TMXX

Rod Conversion	Code
1.5" to 2.5"	2D
40 mm to 40 mm	4E

Technical data

Weight:
2.36 lbs (1.07 kg)
Material:
Aluminum

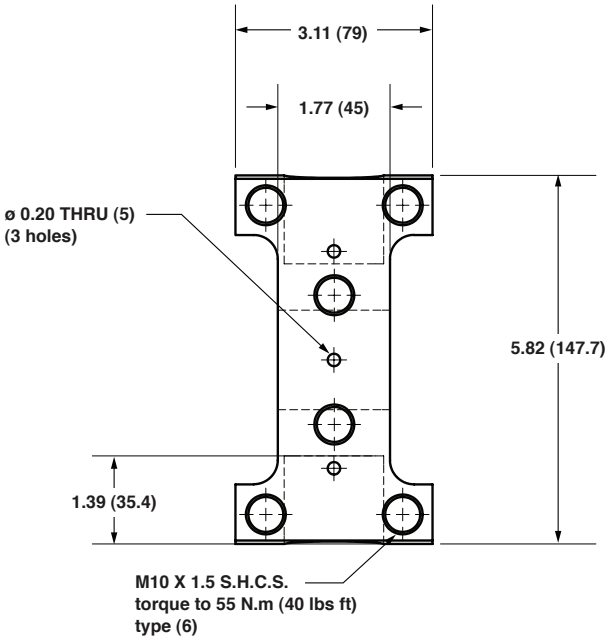

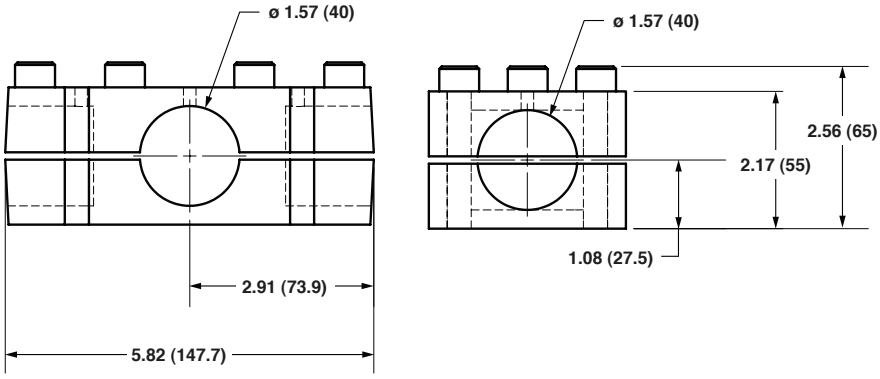

Dimensions in inches (mm) are for reference only

Vacuum and Accessories

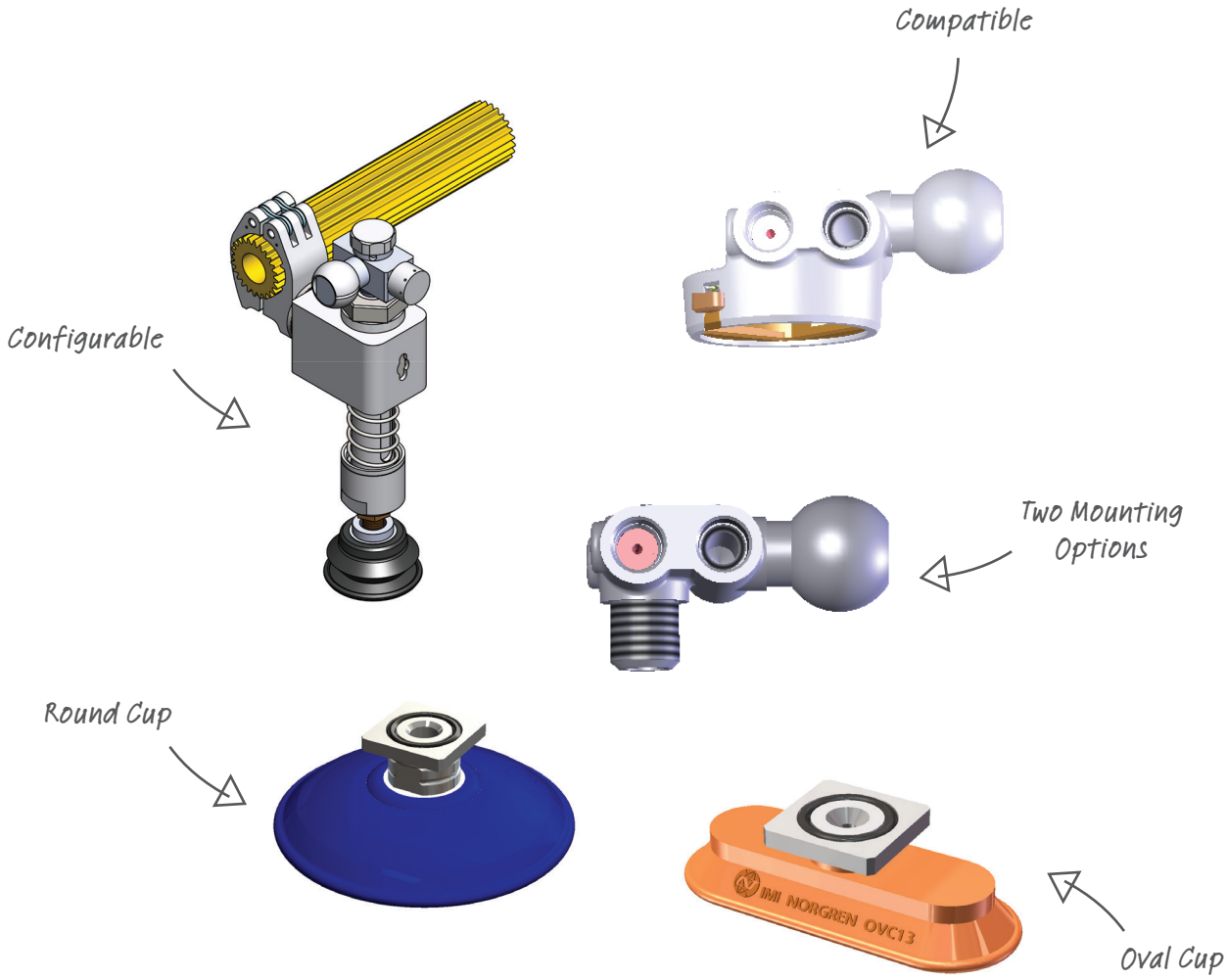

- Spring Mounts
- Venturis
- Vacuum Cups

IMI Precision Engineering
www.norgren.com/automationsolutions
insidesales@imi-precision.com 1-800-272-4511

Fast Find **Guide**

SPRING MOUNT

Spring Mount (SMX)

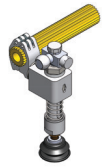

77

VENTURI AND CUP MOUNTS

Single Line Port Venturi with Twist-Lok Cup Mount (TLXX-X)

80

Vacuum Cup Venturi with Threaded Post Connection (TPXB-0-X)

81

Threaded Post Single Line Venturi (TPXX-X-X)

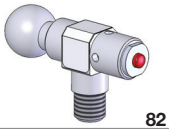

82

Auto Release Valves (ARV)

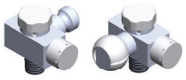

83

Destacker Quick-Change Vacuum Cup Holder (TLCA-X)

84

BELLOWS VACUUM CUP

CVC10 (1.3" diameter)

85

CVC15 (1.7" diameter)

86

CVC2 (2" diameter)

87

CVC3 (3" diameter)

88

CVC4 (4" diameter)

89

ROUND VACUUM CUP

LTC10

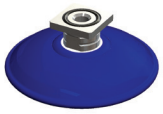

90

Fast Find **Guide**

OVAL CUPS

OVC15
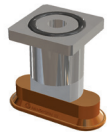
91

OVC13

92

OVC16

93

LTC31-XXX-XXX
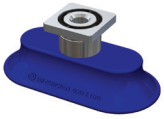
94

OVAL BELLOW VACUUM CUPS

LTC37-XXX-XXX

95

Spring Mount
SMX

- Act as an interface connecting a cup to a venturi/ vacuum source
- Used primarily in destacking applications
- Allows for different height stacks to be used with the same system
- Connects to a vacuum pump, air source, or venturi on one end and either a suction cup or a line to a venturi cup combo on the other end
- Various options available to give maximum versatility to fit a wide variety of tooling situations

Order Information

SM X X X XX or XXXX

Diagram A: Unit Measure	Code
English	E
Metric	M

Diagram B: Travel Length	Code
2" travel	2
4" travel	4

Diagram B: Orientation	Code
Non-inverted	N
Inverted	I

Attachment Options	Code
Apple Core	AN
Ball Mount	BN
Gear	GN
None	NN

Attachment Options	Code
Ø1" POZ-E-LOK (Smooth)	G10S
Ø25 mm POZ-E-LOK (Smooth)	G25S
Ø25 mm POZ-E-NOR (Toothed)	G25N
Ø1.5" POZ-E-LOK (Smooth)	G15S
Ø40 mm POZ-E-LOK (Smooth)	G40S
Ø40 mm POZ-E-NOR (Toothed)	G40N

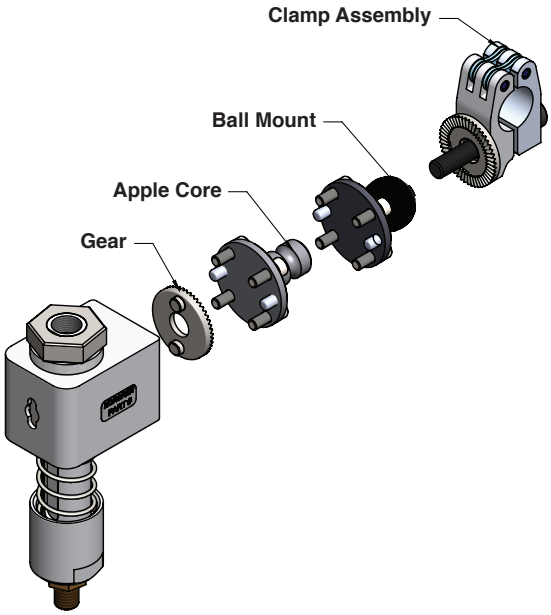

Dimensions in inches (mm) are for reference only

Spring Mount
SMX
Diagram A: Unit Measure

> All threads are offered in English (NPT) or Metric (BSPT) units to ensure compatibility with any system
> 3/8 male pipe fitting located on the bottom of the shaft optimal for suction cup attachment
> 3/8 female pipe thread located at the top of the shaft allowing for a IMI Norgren venturi or other vacuum source attachment

Note: Unit Measure option affects the shaft's ID thread on Top and the OD thread at the bottom.

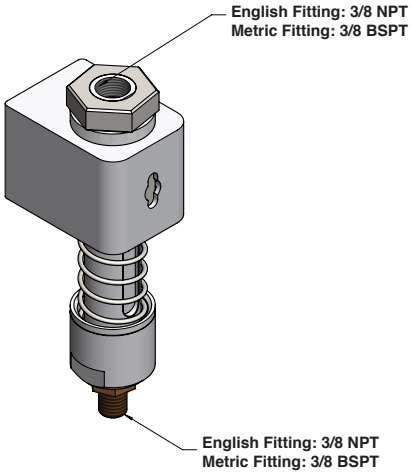

Order information

SM X XXXX

Unit Measure	Code
English	E
Metric	M

Diagram B: Travel Length and Orientation

> Travel provides compensation for the height change in the sheet metal stack.
> A non-inverted or inverted orientation of the spring mount provides flexibility to align the cup to be mounted on the same plane as the sheet metal.

Options selector

SMX X X XX

Travel Length	Code
2" travel	2
4" travel	4

Orientation	Code
Non-Inverted	N
Inverted	I

Technical data

Weight:
1.57 lbs (712 g) - 2.26 lbs (1027 g)

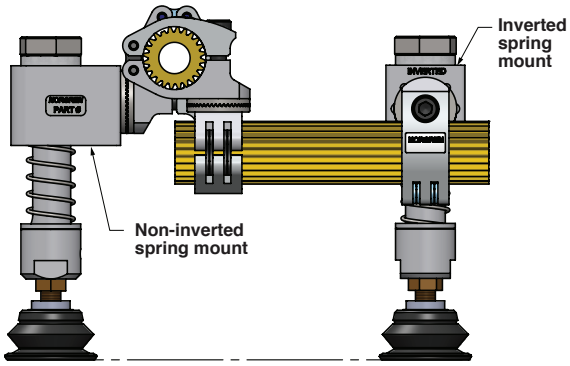

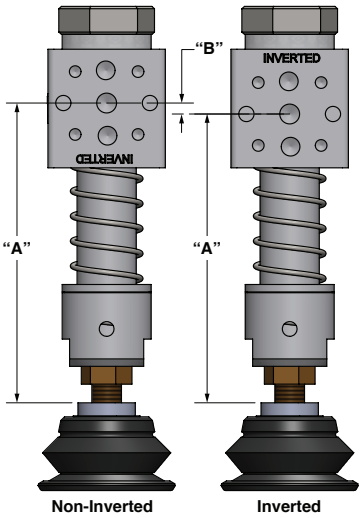

Dimensions

Stroke Options	"A" in (mm)	"B" in (mm)
2" travel (non-inverted)	5.05 (128.40)	0.185 (4.7)
2" travel (inverted)	4.87 (123.70)	0.185 (4.7)
4" travel (non-inverted)	7.01 (178.07)	0.185 (4.7)
4" travel (inverted)	6.82 (173.37)	0.185 (4.7)

Dimensions in inches (mm) are for reference only

Spring Mount
SMX
Diagram C: Attachment Options

> Various mounting options available to allow the spring mount to be attached to any tooling system

Order information

SMXXX XX or XXXX

Attachment Options	Code
Apple Core	AN
Ball Mount	BN
Gear	GN
None	NN

Attachment Options	Code
Ø1" POZ-E-LOK (Smooth)	G10S
Ø25 mm POZ-E-LOK (Smooth)	G25S
Ø25 mm POZ-E-NOR (Toothed)	G25N
Ø1.5" POZ-E-LOK (Smooth)	G15S
Ø40 mm POZ-E-LOK (Smooth)	G40S
Ø40 mm POZ-E-NOR (Toothed)	G40N

Technical data

Weight:
1.57 lbs (712 g) - 2.26 lbs (1027 g)

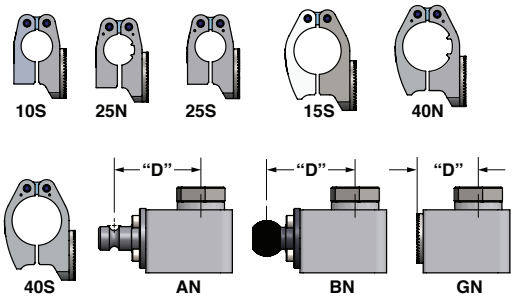

Dimensions

Clamp Assembly	"C"	"D"
10S	0.8661 (22)	2.81 (71.38)
15S	1.1024 (28)	3.105 (78.88)
25S	0.8661 (22)	2.81 (71.38)
25N	0.8661 (22)	2.81 (71.38)
40S	1.1024 (28)	3.105 (78.88)
40N	1.1024 (28)	3.105 (78.88)
AN	0 (0)	2.75 (69.85)
BN	0 (0)	2.80 (71.12)
GN	0 (0)	1.94 (49.33)
NN	0 (0)	1.75 (44.45)

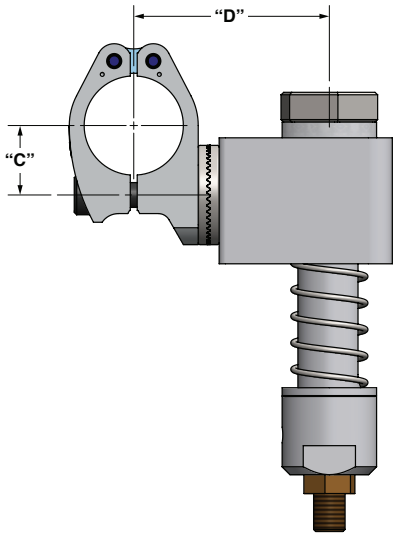

Dimensions in inches (mm) are for reference only

Single Line Port Venturi with Twist-Lok Cup Mount TLXX-X

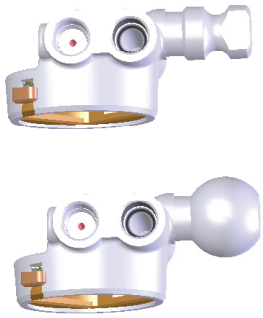

> Compatible with cups that have the IMI Norgren (formerly "ISI") Vac-Lok adapter
> Ball is compatible with most tooling mounting arms
> Optional sensing eliminates the need for a part present switch

Order information

TLXX-X

Twit Lok

Mount Type Options	Code
Ball	B
Swive//Core	S

Circuit Type	Code
Basic Venturi	B
Single Line Venturi	G

Options	Code
No options	0
Silencer/Manual Override	1
Sensing Port	2
Silencer & Sensing Port/Manual Override	3

Technical data

Material:
Brass, Aluminum, Nitrile, Steel
Weight:
0.50 lbs (0.20 g)

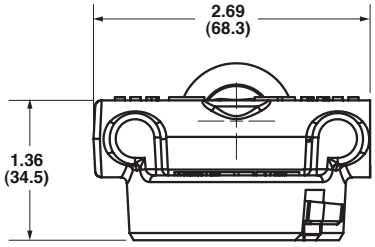

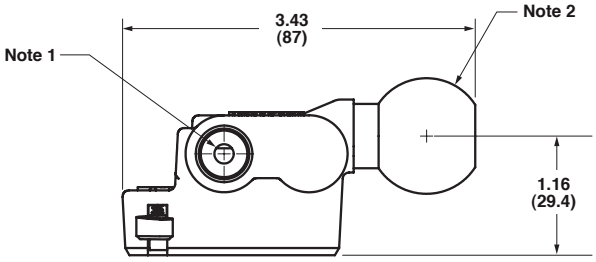

Note 1: Vacuum port compatible with 1/4 NPT, ISO G, ISO R, BSSP, BSPT (thread sealant is recommended for all tapered fittings)

Application

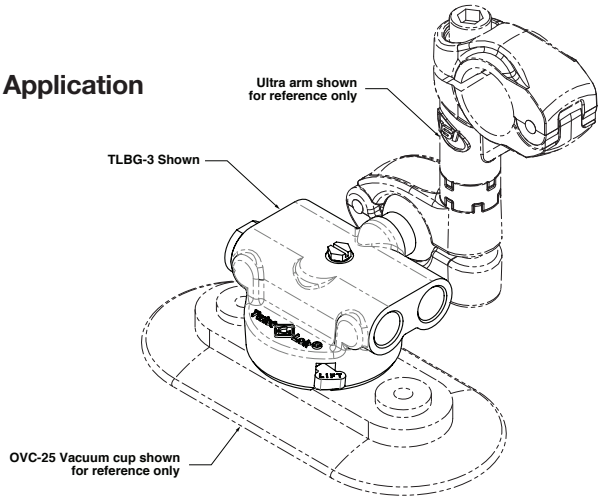

Dimensions in inches (mm) are for reference only

Vacuum Cup Venturi with Threaded Post Connection
TPXB-0-X

> Venturi cup mount for use with vacuum cups that have 3/8"-18 NPT or 3/8"-19 BSP female threaded mounting connections.

> 3/4" diameter shaft (tooling mount option “S”) or 1-1/8" diameter ball (tooling mount option “B”) are compatible with most brands of tooling mounting arms.

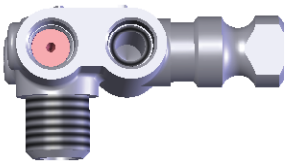

Order information:

TPXB-0-X

Tooling Mount	Code
3/4" diameter shaft	S
1-1/8" diameter ball	B

Post Thread Option	Code
3/8 NPT	1
3/8 BSPT/ISO R	2

Technical data

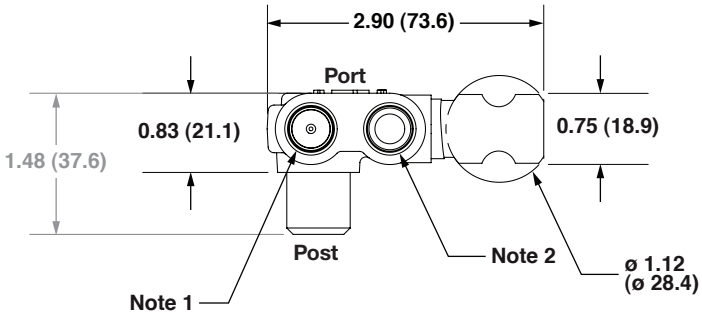

Note 1:
Compatible with English/Metric: 1/4NPT, ISO

Note 2: Blowoff port compatible with 1/4 NPT, ISO G, ISO R, BSPP, BSPT (thread sealant is recommended for all tapered fittings)

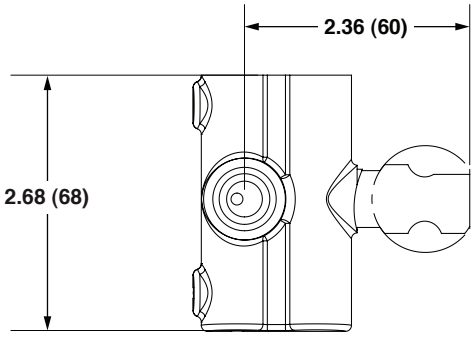

Application

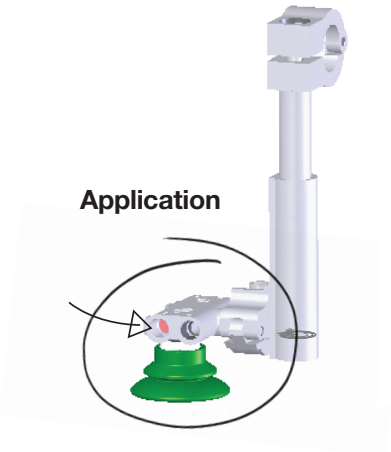

Dimensions in inches (mm) are for reference only

Threaded Post Single Line Venturi
TPXX-X-X

> Optional manual override button available for instant vacuum release

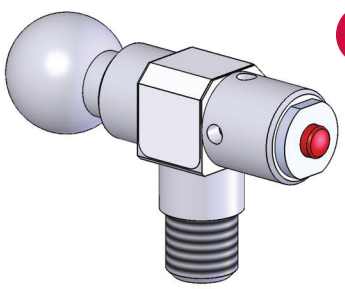

Order information

TPXX-X-X

Thread post

Mount type	Code
Ball	B
Swivel / core	S

Circuit Type	Code
Basic Venturi	B
Single Line Venturi	G

Post thread	Code
NPT	1
BSPT / ISO R	2

Options	Code
Silencer & manual override	1
Silencer, sensing & manual override	3
Option 3 features plus heavy spring (use for blocked exhaust valves)	4

Technical data

Material:
Aluminum/Viton
Weight:
0.17 lbs (0.075 kg)

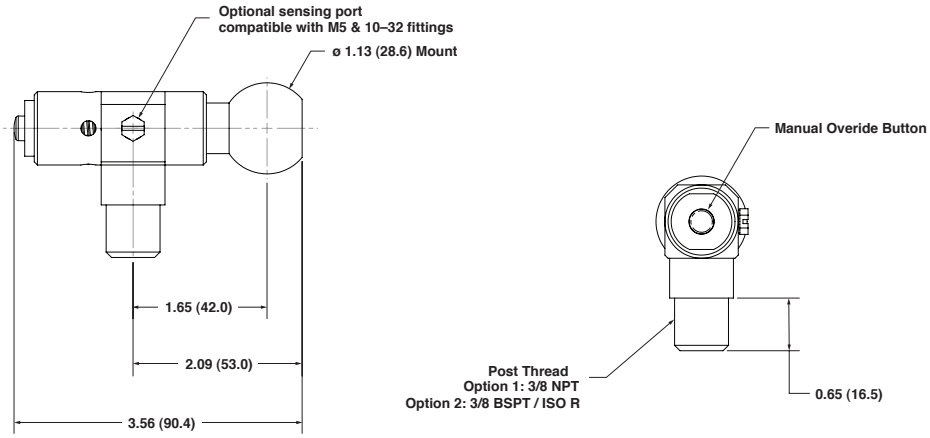

Application

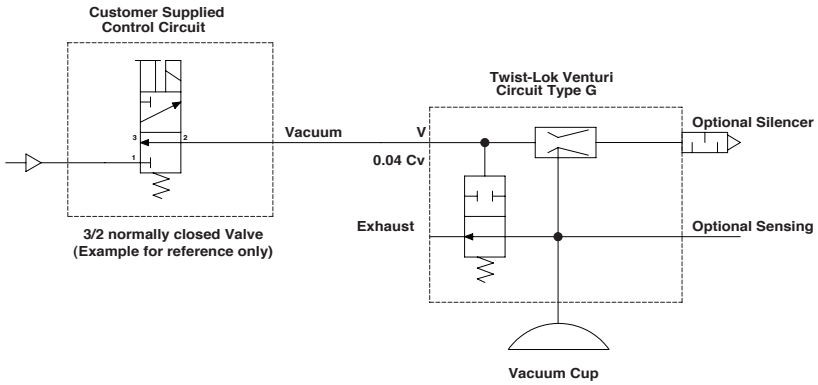

Dimensions in inches (mm) are for reference only

Auto Release Venturi
ARVX-XXXX-XXX

- ARVs connect the cups to the tooling while creating vacuum for panel transfer
- Only one airline is required for vacuum generation
- Blow off is automatic when air pressure is released
- For faster tooling set-up and adjustment, a manual override push button releases vacuum
- Ball and swivel mount options allow mounting the ARV to Ultra Arms (XUMB and IOT) or other clamps

Order information

ARVX-XXXX-XXX

XXX

Mount Orientation	Code
Left	L
Right	R

Mount	Code
Ball	B112
Swivel	750

Thread	Code
BSPT	G38
NPT	U38

Technical data

Weight:
0.28 lbs. (129 g)

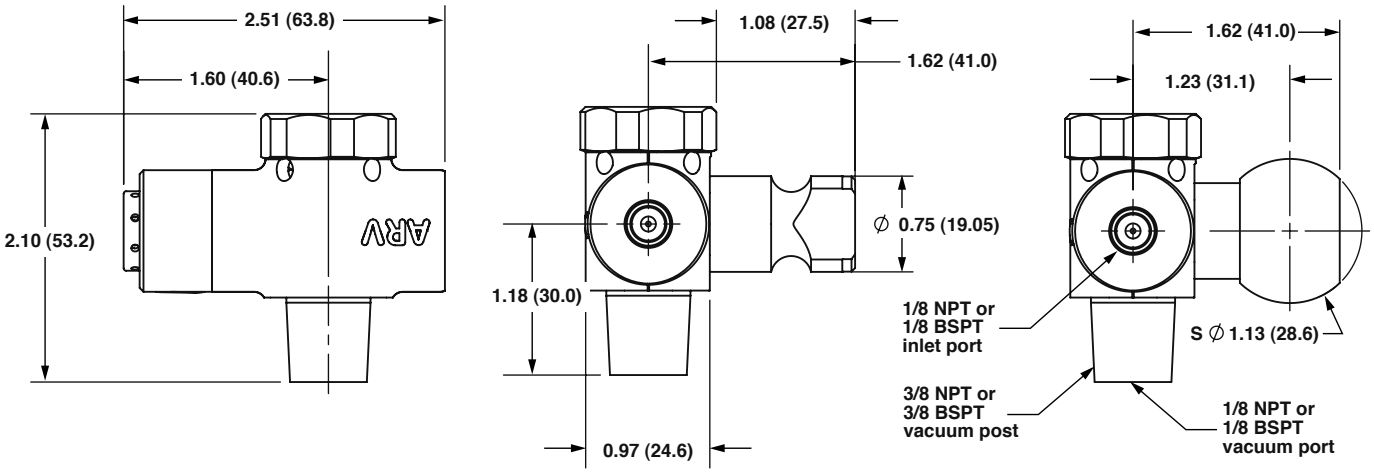

Dimensions in inches (mm) are for reference only

Destacker Quick-Change Vacuum Cup Holder TLCA-X

> Quick change mount for vacuum cups with IMI Norgren (formerly "Syron") Vac-Lok adapter
> Female thread connects directly to pogo-stick lifters in destacker
> Insert and rotate vacuum cup 1/4 turn to lock in place
> Combine: Easy 1/4 turn vacuum cup inserting and releasing

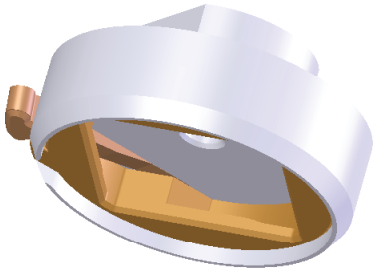

Order information

TLCA-X

Code	Mounting options
1	Female 3/8 NPT
2	Female 3/8 BSPT/ISO R
3	Male 1/4 NPT

Technical data

Weight:
0.2 lbs (0.1 g)

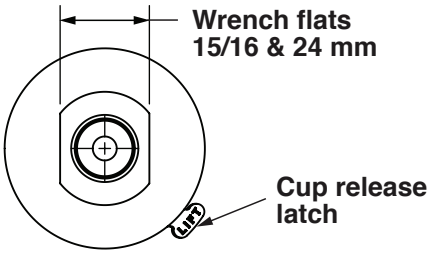

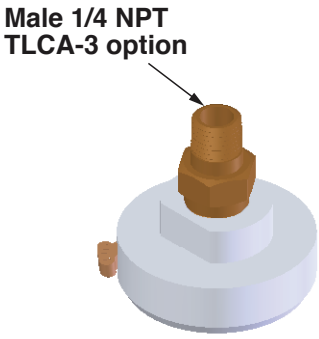

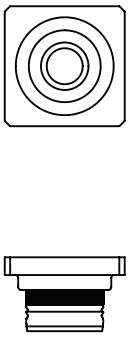

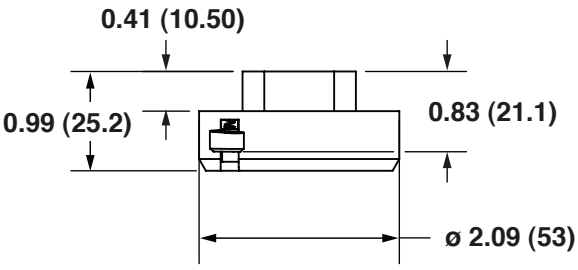

Syron/ISI Vac-Loc square
Cup mount adapter. Order vacuum cup with mounting adapter option "B".

Dimensions in inches (mm) are for reference only

Bellows Vacuum Cup (1.3" diameter)
CVC10

Order information

XCVC10-X

Thread Type	Code
Metric	**X**
English	**Leave Blank**

Mount Type	Code
Vac-Lok Adapter	**Leave Blank**
10M Thread Insert	**T**
3/8 BSPP Thread Stud	**PN**

Technical data

Cup material:
Urethane, Durometer 45 Shore A
Insert material:
Brass/Aluminum
Threaded stud material:
Steel

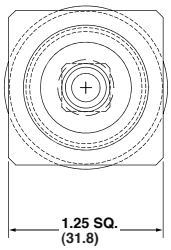

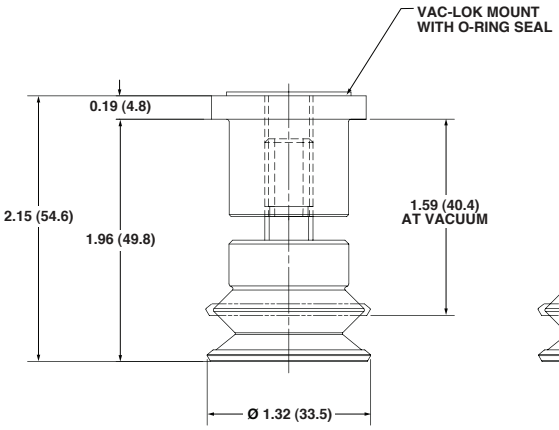

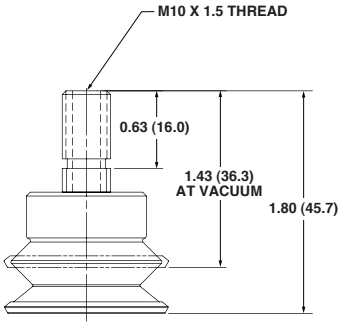

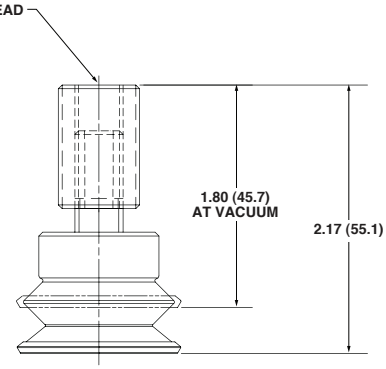

Part number
Metric
XCVC10
Weight
1.68 oz (47.6 g)

Part number
Metric
XCVC10-T
Weight
0.56 oz (15.9 g)

Part number
Metric
XCVC10-PN
Weight
0.88 oz (24.9 g)

Dimensions in inches (mm) are for reference only

Bellows Vacuum Cup (1.7" diameter)
CVC15

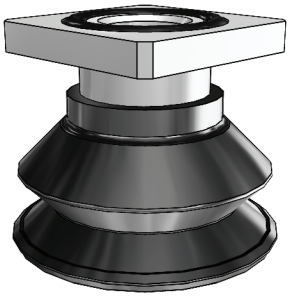

Order information

XCVC15 -X

Thread Type	Code
Metric	X
English	Leave Blank

Mount Type	Code
Vac-Lok Adapter	Leave Blank
1/4 BSPP Port Metric Only	P

Technical data

Cup material:
Urethane, Durometer 45 Shore A
Insert material:
Brass/Aluminum

Weight:
1.12 oz (31.8 g)

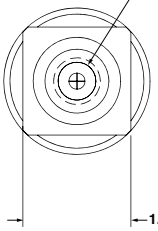

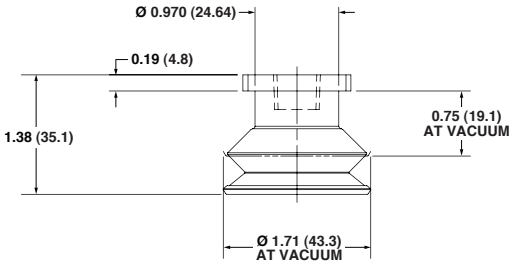

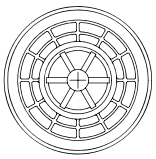

Dimensions in inches (mm) are for reference only

Bellows Vacuum Cup (2" diameter)
CVC2

Order information

XCVC2-X

Thread Type	Code
Metric	**X**
English	**Leave Blank**

Mount Type	Code
Vac-Lok Adapter	**Leave Blank**
Pipe Mount (3/8 BSPP Port METRIC ONLY)	**P**
Pipe Mount (3/8 NPT Port ENGLISH ONLY, 3/8 BSPT Port METRIC ONLY)	**T**

Technical data

Cup material:
Urethane,
Durometer 45 Shore A

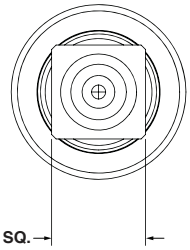

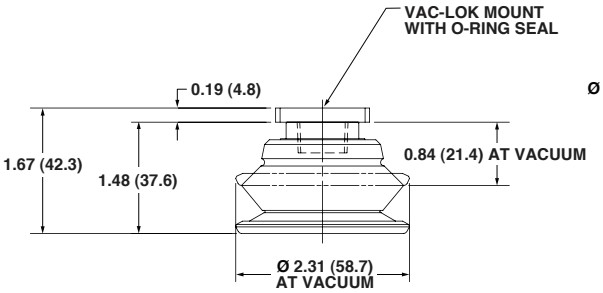

Part number

English	Metric
CVC2	XCVC2

Weight
3.14 oz (89.0 g)

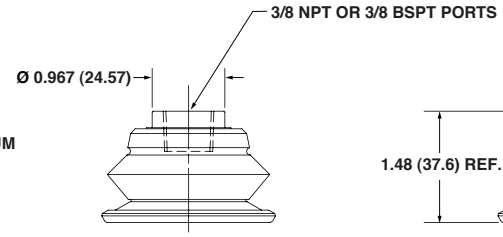

Part number

English	Metric
CVC2-T	XCVC2-T

Weight
2.26 oz (64.1 g)

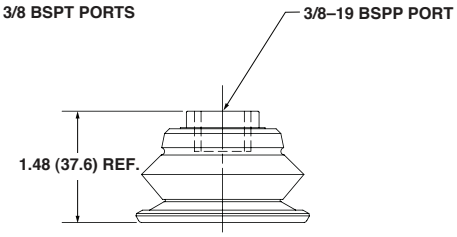

Part number
Metric
XCVC2-1
Weight
2.26 oz (64.1 g)

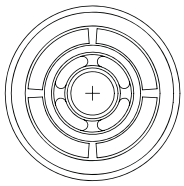

Dimensions in inches (mm) are for reference only

Bellows Vacuum Cup (3" diameter) CVC3

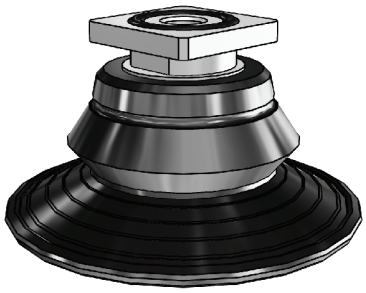

Order information

XCVC3-X

Thread Type	Code
Metric	X
English	Leave Blank

Mount Type	Code
Vac-Lok Adapter	Leave Blank
Pipe Mount (3/8 BSPP Port METRIC ONLY)	P
Pipe Mount (3/8 NPT Port ENGLISH ONLY, 3/8 BSPT Port METRIC ONLY)	T

Technical data

Cup material:
Urethane, Durometer 35 Shore A
Insert material:
Brass/Aluminum
Threaded stud material:
Steel
Vac-Lok material:
Aluminum

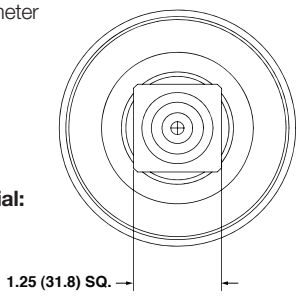

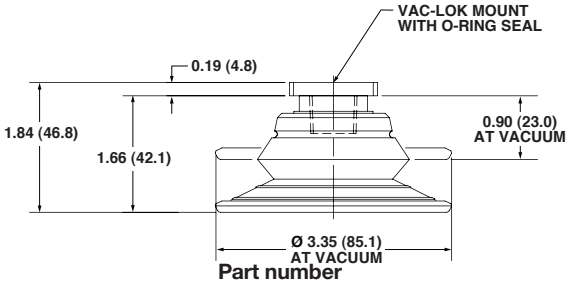

Part number
English CVC3 **Metric** XCVC3
Weight
3.78 oz (107.2 g)

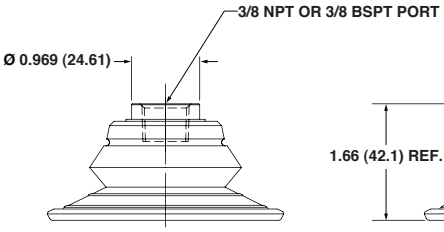

Part number
English CVC3-T **Metric** XCVC3-T
Weight
3.22 oz (91.3 g)

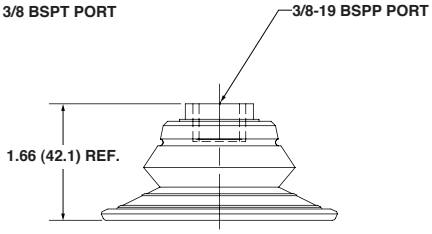

Part number
Metric XCVC3-P
Weight
3.22 oz (91.3 g)

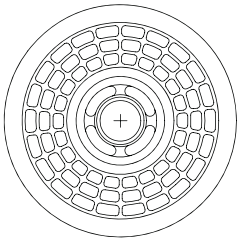

Part number
Metric XCVC3-PN
Weight
3.54 oz (100.3 g)

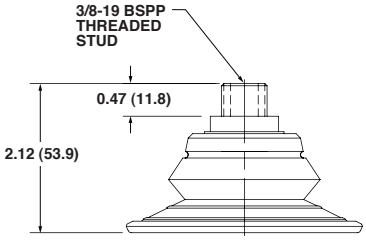

Dimensions in inches (mm) are for reference only

Bellows Vacuum Cup (4" diameter)
CVC4

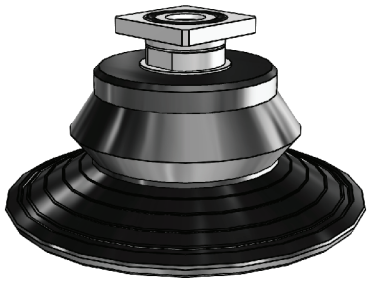

Order information

XCVC4-X

Thread Type	Code
Metric	X
English	Leave Blank

Mount Type	Code
Vac-Lok Adapter	Leave Blank
Pipe Mount (3/8 BSPP Port METRIC ONLY)	P
Pipe Mount (3/8 NPT Port ENGLISH ONLY, 3/8 BSPT Port METRIC ONLY)	T

Technical data

Cup material:
Urethane, Durometer 45 Shore A
Insert material:
Brass/Aluminum
Threaded stud material:
Steel
Vac-Lok material:
Aluminum

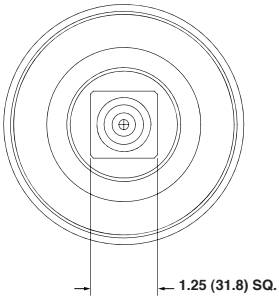

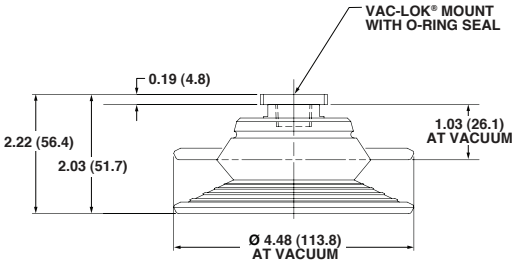

Part number

English	Metric
CVC4	XCVC4

Weight
6.64 oz (188.21 g)

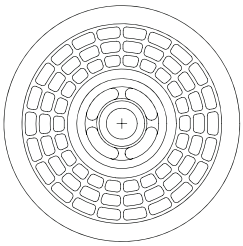

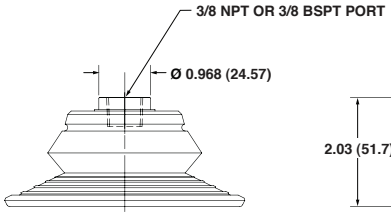

Part number

English	Metric
CVC4-T	XCVC4-T

Weight
6.08 oz (172.4 g)

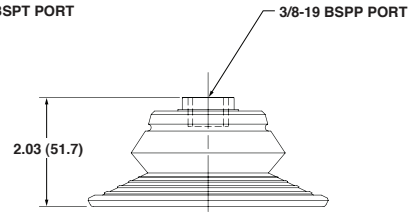

Part number
Metric
XCVC4-P
Weight
6.08 oz (172.4 g)

Part number
Metric
XCVC4-35PN
Weight
6.49 oz (184 g)

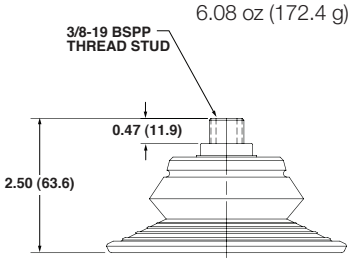

Dimensions in inches (mm) are for reference only

Flat Round Vacuum Cup LTC10

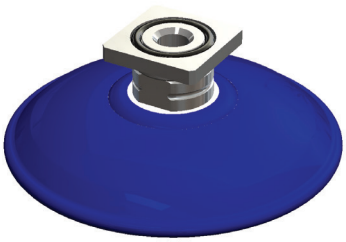

- Used on flat surfaces
- Nitrile rubber has superior abrasion and chemical erosion characteristics
- Triangle pad design provides higher shear force, grip strength and prevents dimpling of material
- Aluminum core design improves part stability
- No silicone content

Order information

Part number	Weight
LTC10-050	45 grams
LTC10-075	76 grams
LTC10-100	99 grams

*Ratings are based on 24 in-Hg and oily surface

LTC10-XXX-X

Size (mm)	Code
050 mm	050
075 mm	075
100 mm	100

Mount Interface	Code
3/8 NPT	None
Square Mount	B

Technical data

Material:
Nitrile Rubber
Color:
Blue
Hardness:
60º Shore ±5º

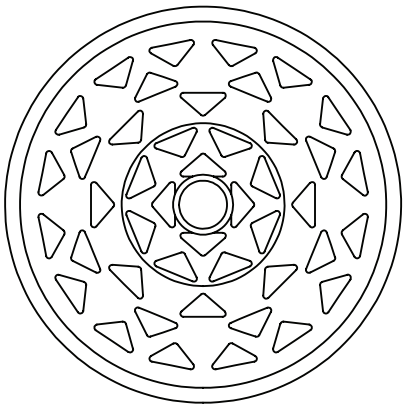

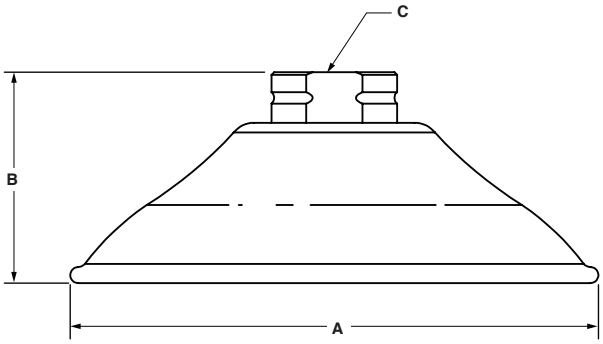

Part number	A	B	C	Compression Stroke	Lift Force	Shear Force
LTC10-050	2.0 (50)	1.28 (32.5)	3/8 NPT	0.20 (5.0)	94 N 21 lbs	53 N 12 lbs
LTC10-075	3.0 (75)	1.44 (36.5)	3/8 NPT	0.30 (7.6)	249 N 56 lbs	89 N 20 lbs
LTC10-100	4.0 (100)	1.64 (41.7)	3/8 NPT	0.51 (13.0)	405 N 91 lbs	169 N 38 lbs

Dimensions in inches (mm) are for reference only

Oval Vacuum Cup
OVCS15

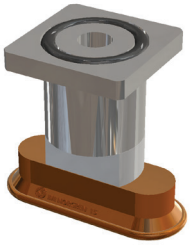

Order information

XOVCS-15X

Thread Type	Code
Metric	X
English	Leave Blank

Omit this designator to order cup with Vac-Lok mount	Code
M10 Thread Insert	T
3/8 BSPP Thread Stud	PN

Technical data

Cup material:
Urethane, Durometer 35 Shore A
Insert material:
Brass/Aluminum

Threaded stud material:
Steel
Vac-Lok material:
Aluminum

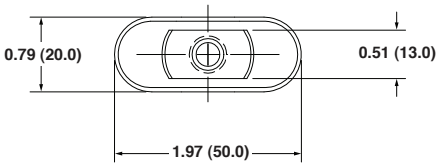

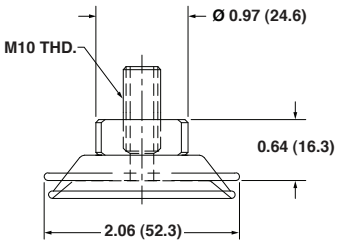

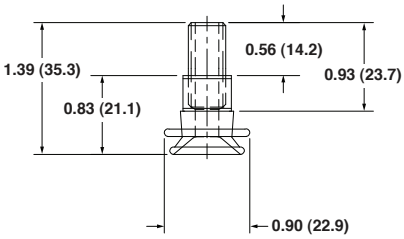

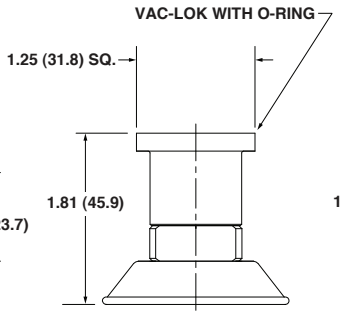

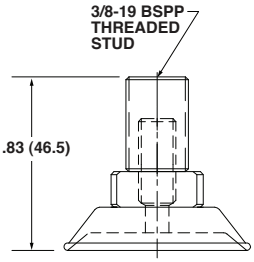

Part number
XOVCS-15T
Weight
1.68 oz (0.048 g)

Part number
XOVCS-15
Weight
1.68 oz (0.048 g)

Part number
XOVCS-15PN
Weight
1.68 oz (0.048 g)

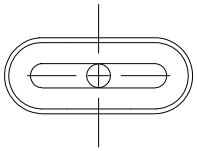

Dimensions in inches (mm) are for reference only

Oval Vacuum Cup
OVCS13

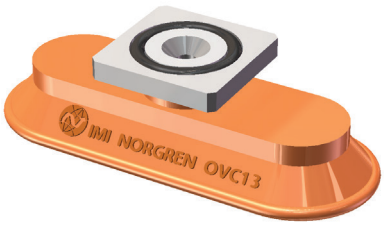

Order information

XOVCS-13X

Thread Type	Code
Metric	X
English	Leave Blank

Omit this designator to order cup with Vac-Lok mount	Code
Pipe Mount (3/8 NPT Port ENGLISH or 3/8 BSPT Port METRIC	T
Pipe Mount (3/8 BSPP Port METRIC Only)	P
Threaded Stud (3/8 BSPP METRIC Only)	PN

Technical data

Cup material:
Urethane, Durometer 35 Shore A
Insert material:
Brass/Aluminum
Threaded stud material:
Steel

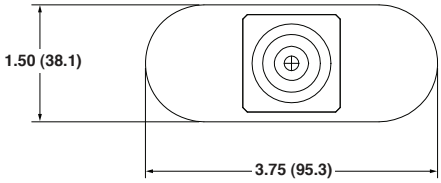

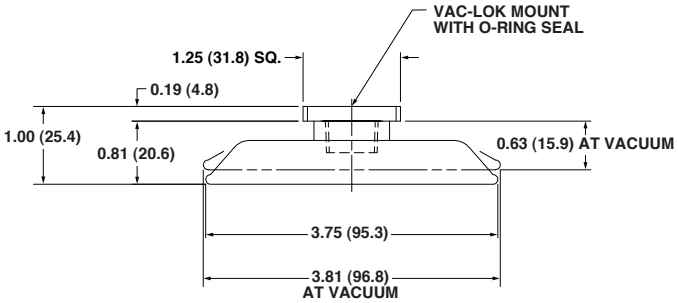

Part number

English	Metric
OVCS13	XOVCS13

Weight
2.00 oz (56.7 g)

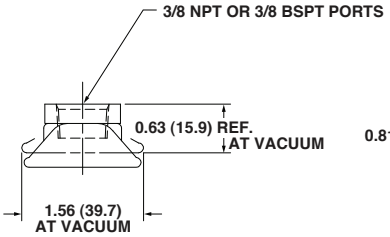

Part number

English	Metric
OVCS13T	XOVCS13T

Weight
1.44 oz (40.8 g)

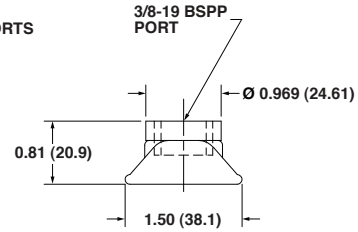

Part number
Metric
XOVCS13P
Weight
1.44 oz (40.8 g)

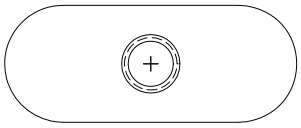

Part number
Metric
XOVCS13PN
Weight
1.76 oz (49.9 g)

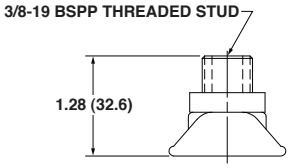

Dimensions in inches (mm) are for reference only

Oval Vacuum Cup
OVCS16

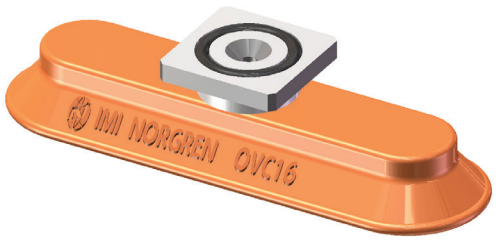

Order information

XOVCS-16X

Thread Type	Code
Metric	X
English	Leave Blank

Omit this designator to order cup with Vac-Lok mount	Code
Pipe Mount (3/8 NPT Port English or 3/8 BSPT Port Metric Only)	T
Pipe Mount (3/8 BSPP Port METRIC Only)	P
Threaded Stud (3/8 BSPP METRIC Only)	PN

Technical data

Cup material:
Urethane, Durometer 35 Shore A
Insert material:
Brass/Aluminum
Threaded stud material:
Steel
Vac-Lok material:
Aluminum

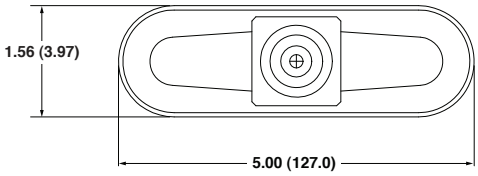

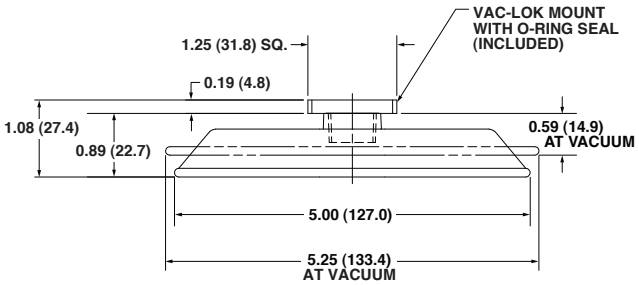

Part number
English OVCS16 **Metric** XOVCS16
Weight
2.56 oz (72.6 g)

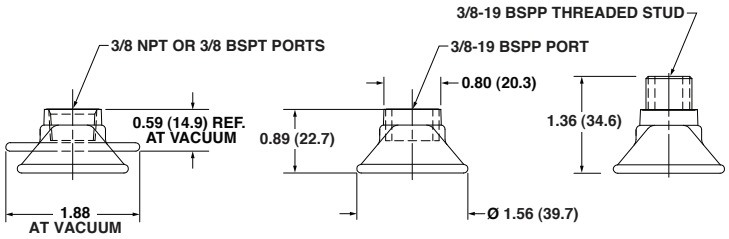

Part number
English OVCS16T **Metric** XOVCS16T
Weight
2.00 oz (56.7 g)

Part number
XOVCS16P
Weight
2.00 oz (56.7 g)

Part number
XOVCS16PN
Weight
2.32 oz (65.8 g)

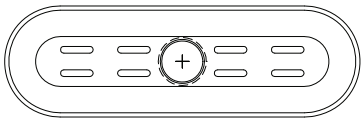

Dimensions in inches (mm) are for reference only

Oval Vacuum Cup
LTC31

> Typically used on aluminum or steel panels
> Provides maximum surface contact on narrow panels or material handled parts
> Triangular tread pattern provides superior shear grip force strength on oily or wet surfaces
> Prevent dimple or damage to panel surface
> Cup's nitrile rubber material has superior abrasion and chemical erosion characteristics

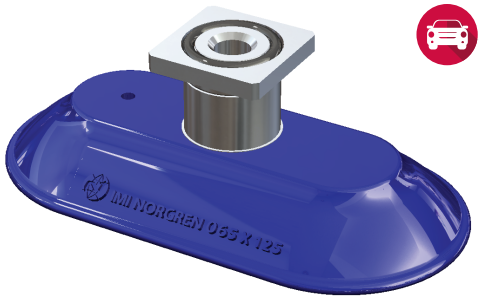

Order information

LTC31-XXX-XXX-X

Cup outer diameter	Code
50 mm	**050**
65 mm	**065**

Cup height	Code
75 mm	**075**
100 mm	**100**
125 mm	**125**

Mount Style	Code
3/8 NPT	**Leave Blank**
3/8 Vac-Lok	**B**

Part Number	Outer diameter	Weight	Mounting
LTC31-050X100	2.0" x 4.0" (50 mm x 100 mm)	45 g	NPT
LTC31-065X125	2.5" x 5.0" (65 mm x 125 mm)	76 g	NPT
LTC31-050X100-B	2.0" x 4.0" (50 mm x 100 mm)	45 g	Vac-Lok
LTC31-065X125-B	2.5" x 5.0" (65 mm x 125 mm)	76 g	Vac-Lok

Technical data

Cup material:
Nitrile rubber

Hardness:
60º Shore ±5º

Color:
Blue

Part Number	A	B	C	D	Compression Stroke	Mininmum radius of curvature (Note 1)	Lifting force	Shear force
LTC31-050X100	2.00" (50 mm)	1.28" (32.5 mm)	3/8 NPT	4.00" (100 mm)	0.20" (5.0 mm)	4.0" (101.6 mm)	56 lbs (249 N)	22 lbs (98 N)
LTC31-065X125	2.50" (65 mm)	1.44" (36.5 mm)	3/8 NPT	5.00" (125 mm)	0.30" (7.6 mm)	7.90" (200.7 mm)	90 lbs (400 N)	41 lbs (180 N)
LTC31-050X100-B	2.00" (50 mm)	1.28" (32.5 mm)	3/8 Vac-Lok	4.00" (100 mm)	0.20" (5.0 mm)	4.0" (101.6 mm)	56 lbs (249 N)	22 lbs (98 N)
LTC31-065X125-B	2.50" (65 mm)	1.44" (36.5 mm)	3/8 Vac-Lok	5.00" (125 mm)	0.30" (7.6 mm)	7.90" (200.7 mm)	90 lbs (400 N)	41 lbs (180 N)

*Ratings are based on 24 in-Hg and oily surface

Note 1: Minimum radius of surface at point of contact where the vacuum cup is placed

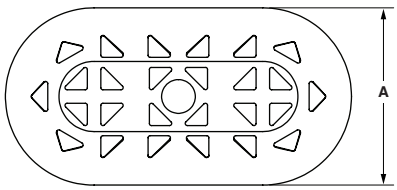

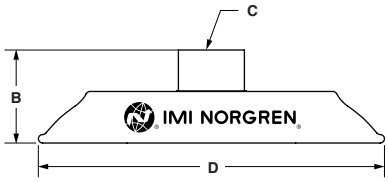

Dimensions in inches (mm) are for reference only

Oval Bellow Vacuum Cup
LTC37

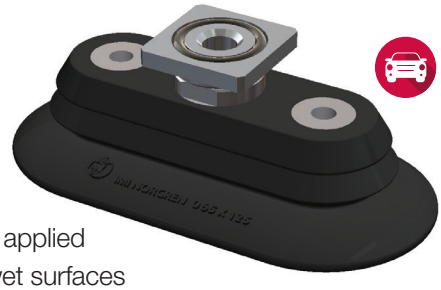

> Suitable for sensitive panel surfaces such as aluminum or steel blanks
> Prevents dimple or damage to panel surface
> Accommodates variations in panel position and/ or surface contour
> Less internal volume, therefore requiring less time to draw suction when vacuum is applied
> Triangular tread pattern provides superior shear force and grip strength on oily or wet surfaces
> Lip design reduces roll-under effect when the panel hits the cup
> Cup's nitrile rubber material has superior abrasion and chemical erosion characteristics
> Silicon-free design provides safe transfer of different panel materials

Order information

LTC37-XXX-XXX-X

Cup outer diameter	Code
45 mm	**045**
65 mm	**065**

Cup height	Code
90 mm	**090**
125 mm	**125**

Mount Style	Code
3/8 NPT	**Leave Blank**
3/8 Vac-Lok	**B**

Part number	Outer diameter	Weight	Mounting
LTC37-045X090	1.75" x 3.55" (45 mm x 90 mm)	55 g	NPT
LTC37-065X125	2.5" x 5.0" (65 mm x 125 mm)	87 g	NPT
LTC37-045X090-B	1.75" x 3.55" (45 mm x 90 mm)	55 g	Vac-Lok
LTC37-065X125-B	2.5" x 5.0" (65 mm x 125 mm)	87 g	Vac-Lok

Technical data

Cup material:
Nitrile rubber

Hardness:
60° Shore ±5°

Color:
Black

Part number	A	B	C	D	Compression stroke	Lifting force	Shear force
LTC37-045X090	1.75" (45 mm)	3.55" (90 mm)	1.00" (25 mm)	3/8 NPT	0.39" (9.9 mm)	33 lbs (147 N)	16 lbs (71 N)
LTC37-065X125	2.5" (65 mm)	5.0" (125 mm)	1.38" (35 mm)	3/8 NPT	0.55" (13.9 mm)	80 lbs (356 N)	24 lbs (107 N)
LTC37-045X090-B	1.75" (45 mm)	3.55" (90 mm)	1.00" (25 mm)	3/8 Vac-Lok	0.39" (9.9 mm)	33 lbs (147 N)	16 lbs (71 N)
LTC37-065X125-B	2.5" (65 mm)	5.0" (125 mm)	1.38" (35 mm)	3/8 Vac-Lok	0.55" (13.9 mm)	80 lbs (356 N)	24 lbs (107 N)

*Ratings are based on 24 in-Hg and oily surface

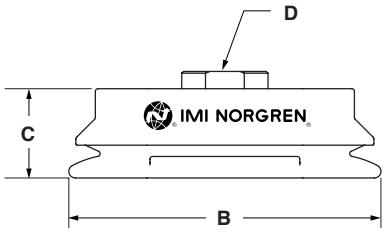

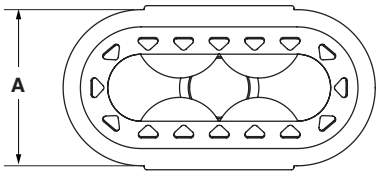

Dimensions in inches (mm) are for reference only

Double Blank Analyzer

Recent trends in vehicle manufacturing found automotive stampers faced with the need to process increasingly thicker blanks while working within smaller size constraints.

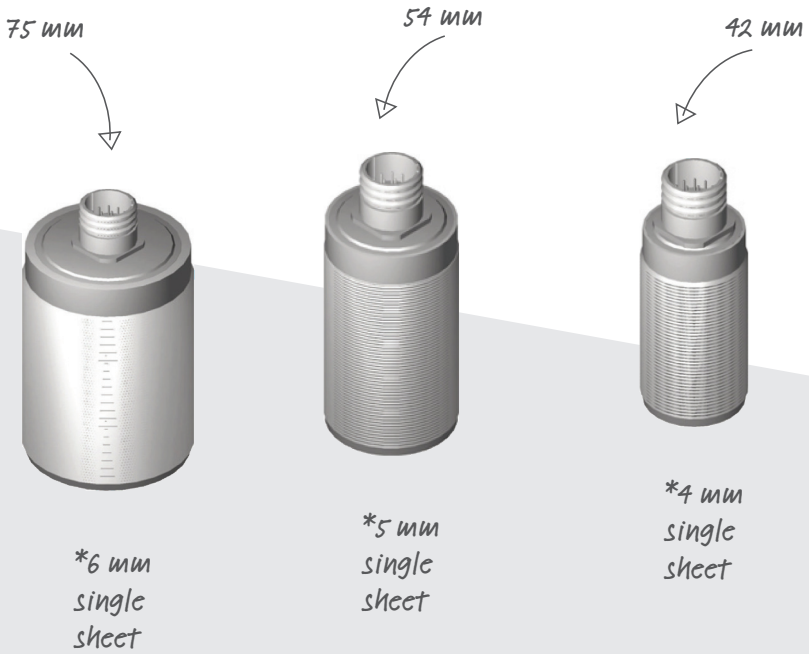

*Maximum recommended single sheet thickness

IMI Precision Engineering
www.norgren.com/automationsolutions
insidesales@imi-precision.com 1-800-272-4511

Features and Benefits

- Greater flexibility with capacity to detect single sheet material thickness range up to 6 mm, compared to 4.6 mm with “legacy” sensors.”
- Ability to detect both ferrous and non-ferrous material reducing the number of cable runs
- Greater tolerance of air gaps for ease of setup, increased uptime and reliability
- Upgraded driver boards that are backwards compatible with old style sensors reducing inventory and enabling potential future system upgrades
- Greater size to measurement ratio – 42 mm sensors have the same range as “legacy” 54 mm sensors
- The ability to sense aluminum up to 3.0 mm
- Up to four independent sensors that can be operated from a single controller for greater flexibility at reading different stations

Double Blank Analyzer

Sales and Service

- IMI Precision Engineering sales, manufacturing and technical centers
- Value Added Resellers/ Distributors

IMI Precision Engineering

www.norgren.com/automationsolutions
insidesales@imi-precision.com 1-800-272-4511

Uttar Pradesh, IN
Shanghai, CN
Japan
China
India
Tokyo, JP
Thailand
Samutprakarn, TH

Global Locations and Partners

IMI Precision Engineering – Auto In-plant Locations

USA
Norgren Automation Solutions, LLC
2871 Bond Street
Rochester Hills, MI 48309 USA

Tel: 1-800-272-4511
Fax: 1-800-626-6092
Email: insidesales@imi-precision.com
Web: norgren.com/automationsolutions

USA
Norgren Automation Solutions, LLC
1325 Woodland Drive
Saline, MI 48176 USA

Tel: 1-734-429-4989
Fax: 1-734-429-7689
Email: insidesales@imi-precision.com
Web: norgren.com/automationsolutions

Mexico
Norgren, S.A.
Av. La Montaña No.120
Parque Industrial Querétaro
Sta. Rosa Jáuregui, Querétaro
C.P. 76220

Tel: +52 442 229 50 00
Email: nas.mexico@imi-precision.com

Brazil
IMI Norgren Brazil
Av. Eng. Alberto de Zagottis 696
04675-085 - São Paulo - SP

Tel: +55 11 5698 4000
Fax: +55 11 5698 4001
Email: vendas@imi-precision.com

China
Norgren Co., Ltd
埃迈诺冠商贸（上海）有限公司.

Tel: +86 21 24161800
sales@imi-precision.com.cn

India
IMI Norgren Herion Pvt. Ltd.
A-62, Sector 63,
Noida- 201301
Uttar Pradesh
India

Tel: +91 (0) 120 4089500
Fax: +91 (0) 120 4089599
Email: india@imi-precision.com

Spain
IMI Norgren S.A.
Colom, 391, 2º - Edificio Tecno
08223 Terrassa

Tel: +34 937489800
Email: spain@imi-precision.com

Thailand
Norgren Co., Ltd
120/34 M. 12 Rachadhewa, Bangplee
Samutprakarn
10540 Thailand

Tel: +66 (0) 2 2750 3598
Fax: +60 (0) 2 750 3855
Email: THSales@imi-precision.com

Value Added Resellers (VARs) and Distributors

Coremo Automation Ltd
Unit 9A – Three Springs Trading Estate
Vincent Road
Worcester
WR5 1BW
U.K.

Tel: +44 (0) 1905 360707
Fax: +44 (0) 1905 360708
Email address: sales@coremo.co.uk

Dyak Systems Inc.
6810 Kitimat Road, Unit 8&9
Mississauga, Ontario L5N 5M2
Canada

Tel: 905-567-4157
Fax: 905-567-4158
Email: salesdesk@dyaksystems.com

Kamco, Inc.
326 Park St.
Troy, MI 48083

Tel: 248-585-7400
Fax: 248-585-7751
Email: sales@kamcocontrols.com
Web: www.kamcosales.com

Mosier Fluid Power
2475 Technical Drive
Miamisburg, OH 45342

Tel: 800-232-0676
Email: sales@mosierohio.com

Motion Industries
1605 Alton Road
Birmingham, AL 35210

Tel: 800-526-9328
Web: www.motionindustries.com

Nicholas Press Sales, Inc.
3077 Nationwide Parkway
Brunswick, OH 44212

Tel: 440-652-6604
Fax: 440-389-8666
Email: sales@nicholaspress.com
Web: www.nicholaspress.com

Taihei Boeki Co., Ltd.
Nikken-Sumisei bldg, 4-15-32
Sakai, Naka-ku, Nagoya, 460-0008
Japan

Tel: +81-(0)52-261-5517
Fax: +81-(0)52-261-2017
Email: nagoya@taiheiboeki.co.ip

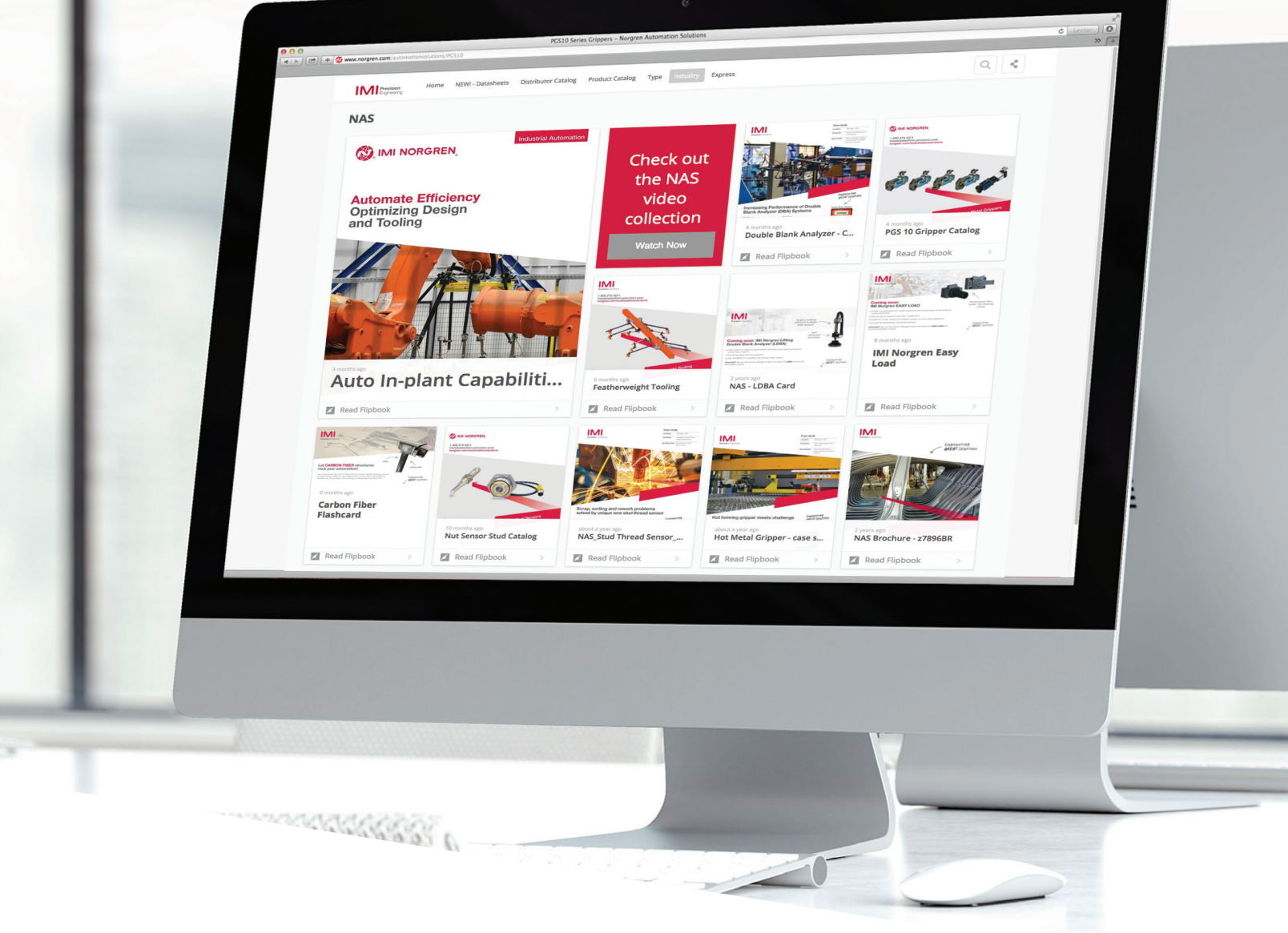

Did you know?

Engineering GREAT Solutions

You can download Press Room Automation catalogs, case studies and more right at your fingertips!

Check out our **Auto In-plant Uberflip** page at:

http://onenorgren.uberflip.com/h/c/226804-nas

IMI Precision Engineering

www.norgren.com/automationsolutions
insidesales@imi-precision.com 1-800-272-4511

Warning

These products are intended for use in industrial systems only. Do not use these products where pressures and temperatures can exceed those listed under Specifications.

Before using these products with fluids other than those specified, for nonindustrial applications, life-support systems, or other applications not within published specifications, consult Norgren.

Through misuse, age, or malfunction, components used in fluid power systems can fail in various modes. The system designer is warned to consider the failure modes of all component parts used in fluid power systems and to provide adequate safeguards to prevent personal injury or damage to equipment in the event of such failure modes.

System designers must provide a warning to end users in the system instructional manual if protection against a failure mode cannot be adequately provided. System designers and end users are cautioned to review specific warnings found in instruction sheets packed and shipped with these products, or posted on the Norgren website under "Downloads." System designers should also provide for all OSHA requirements including Title 29 CFR 1910.147 Lockout/Tagout.

It should be recognized that warnings are valid for any product, regardless of manufacturer, and are not restricted to products manufactured by Norgren. Norgren's reputation for product quality and performance is well established. We feel we have the additional obligation to provide information or warnings to customers to assist them in applying our products in a reasonable and safe manner.

Proposition 65: These products may contain chemicals known to the state of California to cause cancer, or birth defects, or other reproductive harm.

Warranty

Items sold by Norgren are warranted to be free from defects in materials and workmanship for a period of two years* from the date of invoice, provided said items are used according to Norgren's recommended usages. NORGREN'S LIABILITY IS LIMITED TO THE REPAIR OF, REFUND OF PURCHASE PRICE PAID FOR, OR REPLACEMENT IN KIND OF, AT NORGREN'S SOLE OPTION, ANY ITEMS PROVED DEFECTIVE, PROVIDED THE ALLEGEDLY DEFECTIVE ITEMS ARE RETURNED TO NORGREN PREPAID. THE WARRANTIES EXPRESSED ABOVE ARE IN LIEU OF AND EXCLUSIVE OF ALL OTHER WARRANTIES. THERE ARE NO OTHER WARRANTIES, EXPRESSED OR IMPLIED, EXCEPT AS STATED HEREIN.

THERE ARE NO IMPLIED WARRANTIES OF MERCHANTABILITY OR FITNESS FOR A PARTICULAR PURPOSE, WHICH ARE SPECIFICALLY DISCLAIMED. NORGREN'S LIABILITY FOR BREACH OF WARRANTY AS HEREIN STATED IS THE EXCLUSIVE REMEDY, AND IN NO EVENT SHALL NORGREN BE LIABLE OR RESPONSIBLE FOR INCIDENTAL OR CONSEQUENTIAL DAMAGES, EVEN IF THE POSSIBILITY OF SUCH INCIDENTAL OR CONSEQUENTIAL DAMAGES HAS BEEN MADE KNOWN TO NORGREN.

Norgren reserves the right to discontinue manufacture of any product or change product materials, design, or specifications.

For further information, scan this QR code or visit
norgren.com/automationsolutions

1

TANDEM CONCEPTS

EXAMPLES OF INTEGRATED TOOLING FOR TANDEM PRESSES

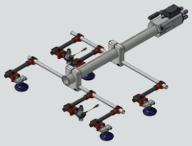

2

IDLE STATIONS

STAGING AREA FOR PANELS IN BETWEEN DIE STATIONS

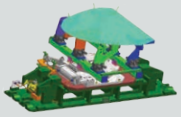

3

TOOLING CARTS

SPACE SAVING AND EASY ACCESS SOLUTIONS FOR TOOLING STORAGE

4

CARBON FIBER STRUCTURES

STRONG, LIGHTWEIGHT STRUCTURES FOR HIGH SPEED AND STABLE PANEL TRANSFER

5

RECEIVERS AND ADAPTERS

COUPLING DEVICE FOR QUICK CHANGEOVER

6

ROUND TOOLING

PRE-ENGINEERED MODULAR COMPONENTS FOR TRANSFER TOOLING

7

VACUUM AND ACCESSORIES

SPRING MOUNTS, CUPS, AND VENTURIS FOR MATERIAL HANDLING

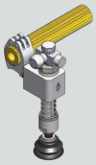

8

DOUBLE BLANK ANALYZER

ENSURES TRANSFER OF SINGLE BLANKS THROUGH DIES

Norgren, Buschjost, FAS, Herion and Maxseal are registered trademarks of IMI Precision Engineering companies.

©Norgren Automation Solutions, LLC 2017

Due to our policy of continuous development, IMI Precision Engineering reserve the right to change specifications without prior notice.

15500SP us/02/17

Selected Images used under license from Shutterstock.com

IMI Precision Engineering

Engineering GREAT Solutions

IMI NORGREN

IMI BUSCHJOST

IMI FAS

IMI HERION

IMI MAXSEAL